This is a digital copy of a book that was preserved for generations on library shelves before it was carefully scanned by Google as part of a project to make the world's books discoverable online.

It has survived long enough for the copyright to expire and the book to enter the public domain. A public domain book is one that was never subject to copyright or whose legal copyright term has expired. Whether a book is in the public domain may vary country to country. Public domain books are our gateways to the past, representing a wealth of history, culture and knowledge that's often difficult to discover.

Marks, notations and other marginalia present in the original volume will appear in this file - a reminder of this book's long journey from the publisher to a library and finally to you.

Usage guidelines

Google is proud to partner with libraries to digitize public domain materials and make them widely accessible. Public domain books belong to the public and we are merely their custodians. Nevertheless, this work is expensive, so in order to keep providing this resource, we have taken steps to prevent abuse by commercial parties, including placing technical restrictions on automated querying.

We also ask that you:

+ *Make non-commercial use of the files* We designed Google Book Search for use by individuals, and we request that you use these files for personal, non-commercial purposes.

+ *Refrain from automated querying* Do not send automated queries of any sort to Google's system: If you are conducting research on machine translation, optical character recognition or other areas where access to a large amount of text is helpful, please contact us. We encourage the use of public domain materials for these purposes and may be able to help.

+ *Maintain attribution* The Google "watermark" you see on each file is essential for informing people about this project and helping them find additional materials through Google Book Search. Please do not remove it.

+ *Keep it legal* Whatever your use, remember that you are responsible for ensuring that what you are doing is legal. Do not assume that just because we believe a book is in the public domain for users in the United States, that the work is also in the public domain for users in other countries. Whether a book is still in copyright varies from country to country, and we can't offer guidance on whether any specific use of any specific book is allowed. Please do not assume that a book's appearance in Google Book Search means it can be used in any manner anywhere in the world. Copyright infringement liability can be quite severe.

About Google Book Search

Google's mission is to organize the world's information and to make it universally accessible and useful. Google Book Search helps readers discover the world's books while helping authors and publishers reach new audiences. You can search through the full text of this book on the web at `http://books.google.com/`

WOODS SIDE HEADS AND PROFILER HEADS

S·A·WOODS MACHINE CO.
BOSTON · U·S·A

Eng
1739
14.5

Harvard College Library

FROM

Eng
1739
14.5

Harvard College Library

FROM

HARVARD COLLEGE LIBRARY
GIFT OF THE
U. S. DEPT. OF COMMERCE
BOSTON

Eng 1737.14.5

Feb. 2, 1921

WOODS
SIDE HEADS
AND
PROFILER HEADS

TRADE MARK REG.

1914

S. A. Woods Machine Co

Executive Office and Works

BOSTON, U S A

CHICAGO NEW ORLEANS NORFOLK SEATTLE

Copyright, 1914, by S. A. Woods Machine Co.

Woods Profile C Disc for four knives

Woods Profile C Disc with Tongue Cutters for 1″ Flooring

WOODS
SIDE HEADS AND PROFILER HEADS

OUR policy of specializing in the manufacture of "THE PLANERS OF WOODS" has placed us in a position to appreciate with more keenness than we could otherwise the importance of efficiency in every element concerned in the dressing of lumber. Not only have we been quick to see this, but manufacturing a specialty has enabled us to develop those improvements that our observations and study have shown were necessary with more thoroughness and completeness than could have been possible under any other conditions.

The production of dressed lumber today is figured so closely that every point of advantage a manufacturer like ourselves can show the lumberman, the greater gain it is to both of us. With the inception of what is now termed rapid feeds, have come problems which have affected the planing machine in other ways than its ability to stand increased strains. We refer to the knife work or quality of dressing.

On this point depends the success of the modern planing machine. It is the vital question in lumber manufacturing. Thru the medium of our patented solid back round cylinders, thin knives and truing devices, quality surfacing was made possible. In this achievement, however, only half the problem was solved. High grade edge and profiler work was also a necessity, and for many

Early Revelations

years our designers and experts have directed their attention to these elements.

Their investigation was not long under way before it was apparent that heads for this class of work would have to be something entirely different from what had been manufactured up to that time. Our initial efforts were devoted to the side head. What we have accomplished in this direction is well known to the lumber world. Our self-centering method of holding side heads on the spindles; designing a head on which the cutters could be jointed while running, and equipping it with knives made of high-speed steel are original "WOODS" features.

Being the first to realize the need of making formed and beaded cuts on a separate attachment, we felt the development of a fast feed head for profiler work could be handled in conjunction with the side head problem. Through the study of these two together, it has been our good fortune to complete a combination of heads that are the most economical and efficient of any manufactured today.

Woods Head Unit

To appreciate the convenience, range and capacity of " WOODS " Heads, it is first necessary to be familiar with the principle on and about which these heads are built. It is our detachable and interchangeable disc construction. The discs are made of a special alloy, 50-point carbon steel which is treated, manufactured and tested in the most careful manner. They are taken from the rough state and passed through the various operations of machine manufacture until finished to a certain profile. The next operation is performed by the tempering department. Here the discs are treated by experts in charge of our furnaces, oil and tempering baths. The temperatures of the

hardening fluids are watched very carefully through the medium of specially manufactured thermometers. The subsequent operations such as blocking, grinding and balancing are performed by the respective departments in our works in an equally thorough manner.

Its completion is determined by a final inspection, and unless perfect in every form, even to the most minute detail, it is either returned to the proper department for correction or thrown out.

Six-Knife Tongue Disc Set Up

No. 1 S, 6⅝″ x 1″ Disc with No. 7 H Cutters to work Tongue on 1″ Standard Flooring

This illustration (1 S) shows the "WOODS" method of holding cutters. It is accomplished by means of a treated high carbon steel clamping block into which is inserted a tempered tool steel set-screw. On the former is a tit or projection with an eye hole which fits into a groove milled

The simplicity of Woods Clamp Block

Advantages of Woods Bit Seat and Milled Back Cutter

in the knife pocket of the disc. A piece of drill rod riveted into the disc passes through the eye hole of the block holding the latter in place. To fasten the cutter, the screw is turned outward until it comes against the disc; to loosen the cutter, the operation is reversed. This makes as strong and simple a holding combination as it is possible to obtain. This arrangement has other advantages, however, namely, the facility with which cutters can be changed, to say nothing of the time saved in having the lock block and screw always in position. Set-ups and grindings can be performed in the minimum time.

With our milled bit seat and toothed-back cutter it is impossible for the knives to drive back even under the heaviest cut. Another feature of the tooth-back knife is that the cutters can always be returned to their true position by the grooves in the bit seat.

No. 8 C, 6⅝" x 1¼" Disc, showing Double Block Construction for Holding Cutters.

Reinforced Clamping for Heavy Cuts

On all discs 1″ or over in thickness, the holding of the cutter is re-inforced by the application of two blocks for each knife. This is done for a two-fold purpose, namely, safety and quality of work. The former is very essential in these days when compensation acts are being passed placing a greater responsibility on the employer. On the latter, the stiffer the hold on the cutter, the better grade of work the head will do. Therefore, it is only natural to suppose that as a cutter or head increases in width or length as it may be termed, the power of clamping should be strengthened correspondingly. Here again are emphasized the advantages of "WOODS" method of clamping the cutters. The easier and quicker the knives on heavy heads can be handled, the greater in gain of production and service. With the clamps always in position, one can readily appreciate the benefit our construction is in changing and setting knives of this character.

No. 3 C, 6⅜″ x ¾″ Disc for Shiplap Heads.

Slight Variations greatly increase Range

One of the most important features of our profiler and side heads is their range. Developing them in this respect has naturally led us into manufacturing a large variety of discs. In many instances the variations are very slight, in fact, the difference is hardly perceptible. An illustration (see cut page 7) is our 3 C four-knife disc made especially for shiplap heads. It is used in conjunction with an adjoining member which is 1″ larger in diameter. Two discs mounted on one head in this manner naturally must have some provision for separation. You will observe on this one a slight hub projecting on the face which is for this purpose.

No. 4 C, 6⅝″ x 1″ Disc for Combination Side Heads.

In contrast to this, some combinations require a recessed disc as 4 C. For example, a three-disc head for heavy work where the thread on the sleeve of the head limits the discs in both number and thickness. It is not advisable to make the discs

thin on heavy cuts, but it is practical to make them with a recess. This construction allows the disc to drop down over the flange of the side-head sleeve.

Small Diameter Members enlarge usefulness of Woods Disc Heads

No. 1 L, 5⅝" x ⅝" Disc — Small Member on Combination Heads.

The center member on three-disc heads very often requires no modification outside of the circle of the disc and its thickness. These naturally are governed by the size and type of cut. Herewith is shown a small diameter disc of our (L) type which is used for making the tongue on double shiplap and decking.

Disc 2 L (illustrated on page 10) is another profile which has a separating hub on both sides. This latter is used in a head where it is necessary to have a space between the two adjoining discs.

No. 2 L, 5⅝" x ⅝" Disc — Separating Member on Combination Heads.

Slight modifications adapt Woods Heads to varied work

On heads for heavy work which are built up with two or more members, one disc must be of a profile that will allow the overlapping of cutters. The Woods 4 A disc shown on opposite page is of this type. This may be utilized in innumerable cases where special patterns are worked.

The Woods "A" and "L" members enable a user to build combinations for working tongue and groove, shiplap, double spline and miscellaneous patterns. Heads made of these units cannot be surpassed for range and efficiency in dressing heavy stock.

On some two-disc heads for work other than regular, it is sometimes well that one of the members be cupped and milled with slots to fit over the cutters that lap above the lower member. Our 4 D disc on opposite page is for this purpose.

No. 4 A, 6⅝″ x 1″ Disc for Combination and Special Heads.

No. 4 D, 6⅝″ x $1\frac{7}{16}$″ Disc for Special Heads.

Diameter of Profiles are not limited

No. 4 S, 10⅝″ x ¾″ Disc with Cutters for Special Shiplap Work.

The adaptability of our disc construction to special work is notable by this illustration of our 4 S member. It is an excellent example of the range and adaptability of "WOODS" heads. This one is 10⅝″ in diameter, ¾″ thick, fitted with six cutters clamped in their respective positions. This disc many times will save a concern the cost of a complete pair of special side heads.

Angle of Knife Pockets

It is well to note the milling of the knife pockets in all our discs. They are so machined that the knives hold their true position in relation to the

2 C Member illustrates Woods small circle Discs

No. 2 C, 5″ x 1″ Disc for Hollow Backing.

stock when making the cut. The angle of the knife in the cut is as near 90 per cent as practical. This feature is a valuable one, for it facilitates grinding. By this we mean that the cutting and clearance of bevels which the different classes of work require can be more easily obtained when grinding the knives than would be possible if the cutters were held in the disc at another angle.

Interchangeabilities of Woods Heads

All discs are interchangeable on the matcher spindles of our planers and the spindles of our profiling attachment.

These are only a few of our profiles. A full set will be found in outline at the back of the book, accompanied by tabulated forms for the purpose of enabling users to familiarize themselves with our heads and assist them in utilizing the discs in as many combinations as possible. These forms are also helpful in ordering.

WOODS SIDE HEADS

Woods 4-Knife Disc Heads for Flooring

Tongue Head.

Sleeve, No. 9445
Inner bushing, No. 4555 A
Disc No. 1 C, 6⅝″ x 1″
Cutters, No. 7 H
Knurled Nut, No. 4556A

Groove Head.

Sleeve, No. 9445
Inner bushing, No. 4555 A
Disc No. 2 O, 6⅝″ x 1¾″
Jointing Cutters, No. 4686 G
Groove Cutters, No. 9158 B
Knurled Nut, No. 4556 A

With the problem of dressing lumber growing more difficult as time goes on, it is well to consider that the requirements of modern side heads not only mean their ability to stand up under fast feeds, but what they are capable of returning in the way of quality at a rapid production. This has been foremost in our minds since the time when 100-foot matchers were just coming into use. We could see ahead that planers would be built for 150 feet and 200 feet per minute capacity and so on. Today some mills are running 300 feet per minute and over.

Woods Initiative

Before taking up the manufacture of side heads we tried out practically every make, all with the same results, that is, they could not produce the proper class of dressing at feeds over 100 lineal feet per minute. Had we not had this experience, it is doubtful if we would be manufacturing heads today. This is one reason we began specializing.

It was obvious to us in the beginning that three changes were absolutely necessary to make a successful fast feed side head. These were: First, method of holding head; second, cutters made of better steel; third, some arrangement for placing all the knives in a true circle when in motion.

4-Bit Grooving Disc for Flooring No. 2 O, 6⅝" x 1¾"

Old Methods versus New Methods

Our success in developing the former point is well known. Practically no attention had been given to setting the side head on the machine up to this period. We knew a side head could not be held in position by a set screw without canting the head to one side or the other, and that a head in this condition could not produce the best quality of work. Then again the set screw naturally chewed up the side spindle, and this was a detriment. It was fallacy to expect good results under these conditions, and we sometimes wonder how the old heads worked as well as they did with the set screw holding method. Our self-centering device proved the keystone in the development of a successful side head. The line drawing appended shows the trueness with which a head is set when drawn centrally into position. This arrangement places the head under running conditions that are as near ideal as possible.

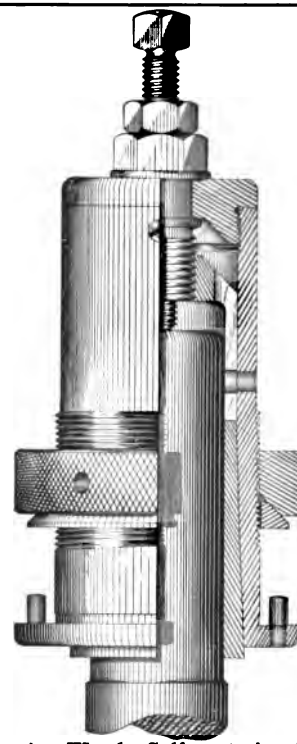

Sleeve No. 4553 B

Inner Bushing No. 4555 A

Knurled Nut No. 4556

Beveled Ring No. 4557

Section showing Woods Self-centering Method of Side Head Application.

Adaptability of Woods Disc Heads to other make of Machines

In case it is desired to use " WOODS " heads on other machines with different-sized spindles the taper bushing may be removed and replaced with another having the proper bore.

" WOODS " initiative is also responsible for the introduction of high speed steel cutters in side head practice. The rapidly growing demands of the lumber industry necessitated a knife made of the highest grade and toughest steel manufactured. Only through careful experimenting were we able to decide the best steel for this purpose. Here again attempts are being made to imitate us. There are many so-called high speed steels manufactured, but only one that meets all the requirements.

Fig. 3. Showing Woods Tonguing Head dissected
Sleeve No. 9445. Inner Bushing No. 4555 A. Knurled Nut No. 4556. 4-Knife Tongue Disc No. 1 C, $6\frac{5}{8}'' \times 1''$
Beveled Ring No. 4557. Tongue Cutter No. 7 H. Spanner No. 35.

Analysis of Tongue Head

The simplicity of our construction is well illustrated in the dissected view of the tongue head opposite. It shows the outer forged steel threaded sleeve, the inner tempered spring steel bushing, the disc with tongue cutters together with the steel tapered ring, knurled clamping collar and drop-forged spanner. The inner bushing is adjusted up and down through the medium of a specially machined screw entering the outer sleeve from the top, the head of which is squared to receive a wrench.

Woods Type "A" Side Head Truing Device for Straight Jointing. Also a Woods 4-Knife Disc Shiplap Head. Disc Nos. 3 C, 6⅜" × ¾", 3 C, 7⅜" × ¾". Cutter No. 10 F. Jointing Stone No. 3901.

Woods Early Achievements signified Permanent Success

Our achievement in developing a side head on which the knives could be jointed and introducing a side head truing attachment does not need to be dwelt upon here to any extent. It is conceded by all lumbermen that we were the pioneers in these movements. These three features have proven to be fundamentals upon which our leadership has been maintained and which have been responsible for our later successes.

Woods Builds for the Future

It is common talk in the lumber world today that a machine must dress stock at least 150 to 200 lineal feet per minute to make a mill profitable. In introducing our 400 series matchers, which was done at a time when 200-foot rates were remote and which by the way was only two or three years ago, our designers built planers for a productive rate of 100% greater than the demands prevalent at that time. Our expectations for machines of still greater capacity have materialized, for "THE PLANERS OF WOODS" are to-day dressing lumber, and giving the highest quality of finish, at 300 lineal feet per minute. Two Western mills, both of them running from three to five of our 400 type planers inform us that the machines are running 340 and 350 lineal feet per minute. These results are only possible through a successful planer in its entirety which must take in the side and profiler heads. A few pages back will be found an illustration of our patented four-bit convertible disc matcher heads. We show here our six-bit convertible disc heads set up for flooring.

Woods 6-Bit Disc Heads for 1″ Flooring.

Tongue Head.
Disc No. 2 S 6⅝″ × 1¼″
Cutter No. 7 H
Clamp Block No. 4597 A
Knurled Nut No. 4556 A
Outer Sleeve No. 9445
Inner Bushing No. 4555 A

Groove Head.
Disc No. 2 T, 6⅝″×1¾″
Groove Cutter No. 9158 B
Groove Cutter Holder No. 9157 B
Pin No. 9394 B
Jointing Cutter No. 4686 H
Outside Sleeve No. 9445
Inner Bushing No. 4555 A
Knurled Nut No. 4556 A

Woods 6-Knife Head equally as efficient and less costly to maintain than any so-called Twelve-bit Head

Close study should be given these illustrations for several reasons.

In the first place "WOODS" heads are the easiest to set up and manipulate. We hear more or less about twelve-bit side heads which is big talk when one considers the faster the feed the more knives are required. However, to carry out this principle, it is not necessary to complicate construction. The so-called twelve-bit heads are nothing more than six-bit heads, for the number of knives are only doubled up by dividing the cut. In other words, what is done by two knives with a so-called twelve-bit head is accomplished with one knife of a "WOODS" head. Therefore, while there are twelve cutters on the former, they are

Simple Construction Accurate Production

only doing the work of six whole knives; the advantages gained by the "WOODS" construction are obvious. There are less knives to handle, which means a reduction of time in grinding and setting as well as a reduced cost of up-keep. It is not only necessary in these days of keen competition to obtain a head that has capacity and will produce quality at fast feeds, but it is just as essential to have side heads that are easily handled, simple in detail and maintained at the lowest possible cost.

In developing these fast-feed side heads which are recommended for dressing stock up to and over 300 lineal feet per minute, we have constantly kept before us the important item of labor, simplicity and accuracy. To show the extent with which this has been carried out, we need only draw your attention to the head which makes the groove. This naturally is a little more complicated than the tongue head, and consequently the most difficult one in which to carry out these features. The members of both heads as far as the disc, clamp nuts, inner and outer sleeves are concerned are similar. The cutters, however, are entirely different as is also the profile of the disc.

Expansion of Cutters

Our grooving head contains an expansion feature which is of great value and very simple. The cutters are adjusted by means of screws which enter the disc from the top. There is one adjusting screw for each cutter, and every other one is threaded the same, — in other words, in the six-bit head three of the adjusting screws have right hand threads and three left hand. Therefore, in making the adjustment, the screws are all turned the same way, and only every other cutter will move in the same direction, that is, if the first cutter comes up, the second cutter goes

6-Bit Groove Disc No. 2 T, 6⅝″ × 1¾″, with 6 jointing and 6 grooving cutters for 1″ Flooring.

down a corresponding amount. In this manner it is not necessary for the one making the adjustment to keep in mind the direction in which the screws should be turned, but devote his entire attention to regulating the cutters for the proper amount of expansion or contraction. Another advantage of this feature is that the expansion is readily divided between the cutters. This construction allows $\frac{3}{16}$″ expansion of the cutters, but more is possible by regrinding the knives which is necessary to maintain the shape of the groove.

Another gain made with our grooving head is the readiness with which it can be converted into a head for jointing. This conversion is made by simply loosening the square headed lock screws which also enter the disc from the top, and remove each grooving cutter and its holder.

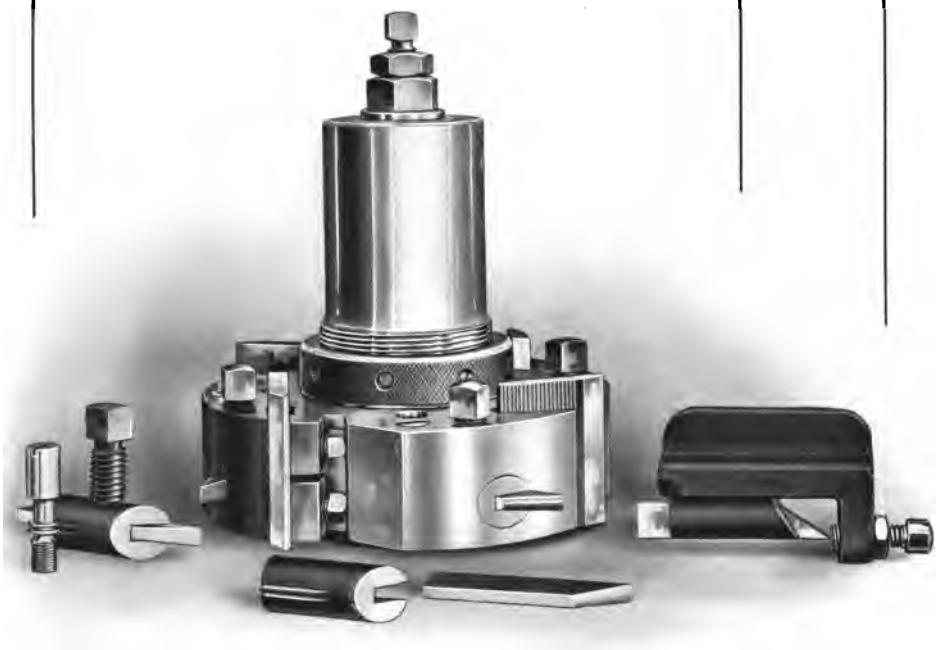

Woods 4-Bit Groove Head set up for Dressing 1″ Flooring.

Setting Gauge, Groove Cutter, Holder, Adjusting and Lock Screws, shown in the foreground.
Disc No. 2 O, 6⅝″ × 1¾″
Groove Cutter No. 9158 B
Groove Cutter Holder No. 9157 B
Adj. Screw No. 01⅜06 E
Jointing Cutter No. 4686 G
Clamp Block No. 4597 C
Lock Screw No. 01½09
Setting Gauge No. 6697

Time-saving Features

The head has still another advantage. In the rear of each hole which receives the groover and its holder is a set pin which is never disturbed. When the two former are removed from the disc for the jointing operation or some other purpose, it is not necessary to disturb the adjusting screws; therefore, they are replaced in the head, in the exact position occupied by them before the removal. The grooves in each holder which mesh with the threads on the adjusting screw insure the return of the holder to its old position without any possibility of variance. After the replacement,

the locking screw is tightened and the head is all ready for work. This one feature means the saving of a large percentage of time in jointing, setting and grinding.

A Positive Clamp on all Cutters

Our method of holding the jointing knives in the six-bit groove head is worthy of note. It is accomplished by means of a taper tool-steel pin, the flat side of which comes against the smooth face of the cutter. In driving this pin into the position, the milled teeth on the back of the cutter automatically assume their respective positions in relation to the grooves in the bit seat. It is impossible for the cutter to move, once it has been set. The same rigid hold is obtained through this scheme as is accomplished by our clamp block arrangement. It will be observed from the under view of the grooving head that by utilizing this method of holding the jointing cutters it is possible to retain the greatest amount of metal in the disc. This same view also shows the flange on the base of the outside sleeve as well as the inner self-centering bushing.

Base View of Woods 6-Knife Groove Head for Flooring showing Inner Split Bushing and Flange on Outer Sleeve

Disc No. 2 T, 6⅝" × 1¾"
Jointing Cutter No. 4686 H
Inner Bushing No. 4555 A

Groove Cutter No. 9158 B
Pin No. 9394 B
Outer Sleeve No. 9445

Facility of Setting up Groove Head

Before passing on, your attention is directed to the small hand gauge shown in the engraving on page 20. It represents a most simple and effective method of setting the grooving cutters. The gauge is held in the hand, and the holder and cutter placed in it. When the correct position of the knife is ascertained, the gauge is set accordingly by means of an adjusting screw which is positioned by a check nut. This same setting is used on the remaining cutters and their holders, which insures them all being the same. The great advantage of this arrangement is that the grooving cutters can be set independently of the jointers. This eliminates any lost time in resetting the groovers in the head following the jointing operation. The holders are so machined, that once the cutter is set in position it cannot be easily disturbed.

Top View of Woods 6-Bit Flooring Heads.

All cutters in our tongue heads are set in position on an angle cutting on a shear thereby reducing the strain and enhancing the quality of finish.

The advantage of Woods Detachable Disc Construction

In all illustrations thruout the booklet, the reader perceives one decided advantage in the "WOODS" side head made possible thru our detachable construction; namely, the ready conversion of a head for working several patterns. The difference in all our heads comes only in the discs and cutters, and by changing these, a head for working one class of stock is readily converted for handling some other pattern. Therefore mills adopting "WOODS" heads are not put to the unnecessary expense of buying a superfluous number of heads. The disc in this illustration, which is our 2 S 6⅝″ x 3″ with jointing cutters, is applicable to any of the heads shown on the previous pages. For example, let us assume your machine is set up with a pair of our flooring heads and in operation. It is your intention when thru with the run to work some square edge stock.

6-Knife No. 2 S, 6⅝″ x 3″ Disc with No. 4686 T Cutters for Jointing 4″ Stock.

Woods Disc Jointing Heads

While waiting for the planer to complete the run, your grinding room can be grinding up a pair of jointing discs and set up the cutters, having everything all ready to make the change just as soon as your feeder is ready. No time is lost in resetting the heads on the planer or setting the knives; just loosen the knurled nuts and make the exchange of discs.

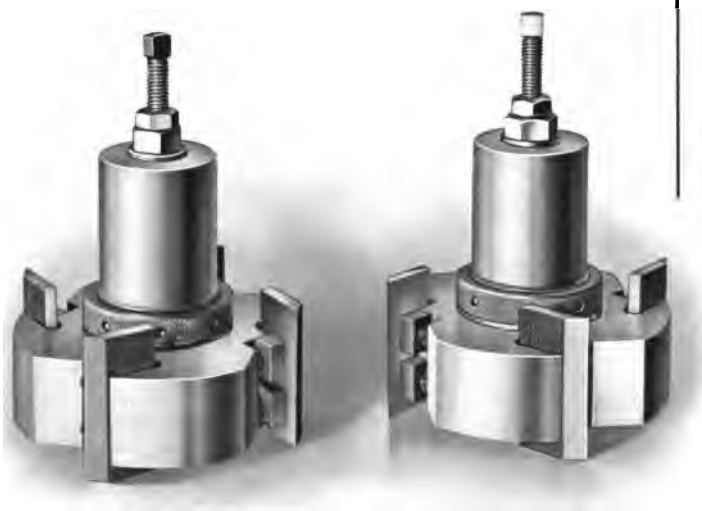

Woods 4-Knife Disc Heads for Jointing 3″ Stock. Disc No. 8 C, 6⅝″ x 2½″. Cutter No. 4686 K.

The "WOODS" disc head for jointing is unequalled, for it contains all the advantages of our matching and shiplap heads, namely, self-centering clamp sleeves, high-speed steel knives and range. The heads are made with either four or six cutters, depending on the rate of feed.

For jointing stock over 4″ thick we recommend the Woods four- or six-knife round solid back self-centering head.

Woods Shiplap Disc Heads

Woods 4-Knife Shiplap Heads with No. 3 C, 6⅜″ x ¾″ and 3 C, 7⅜″ x ¾″ Discs. Cutters No. 10 F.

For dressing shiplap, each head contains two discs. These members are interchangeable from one head to the other, — in other words, the top disc of one conforms in all respects to the bottom disc on the opposite head. The size of lap can be readily changed by setting the cutters in or out as occasion demands. The discs can be used on the heads separately for jointing thin stock.

Disc Heads for heavy Planers

The engravings herewith show a pair of "WOODS" disc flooring heads as made for machines with long matcher spindles, principally heavy planers and matchers and timber sizers. It will be observed that ample provision has been made for adjusting the heads on the spindles.

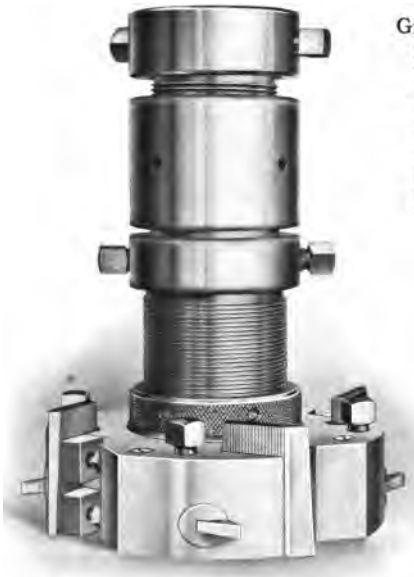

Groove Head.
Sleeve No. 9448
Vertical Adjustment Collars
No. AB 791 and No. AB 792
Tightening Collars No. 6740
Disc No. 2 O, 6⅝"x1¾"
Jointer Cutters No. 4686 G
Groove Cutter No. 9158 D
Knurled Nut No. 4556 A

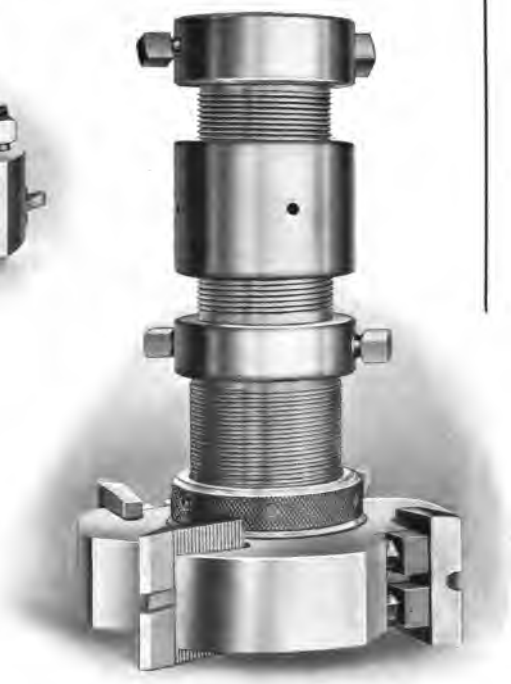

Tongue Head.
Sleeve No. 9448
Vertical Adjustment Collars
No. AB 791 and No. AB 792
Tightening Collars No. 6740
Disc No. 8 C, 6⅝"x1½"
Tongue Cutters No. 1 S
Knurled Nut No. 4556 A

Woods 4-Knife Disc Flooring Heads for Planers with High Spindles.

Our scheme of adjustment is a very valuable one, for it is possible to use our modern fast feed head on any planer equipped with top bearings.

It is not possible on this head to use our self-centering holding device.

Our plug type construction is most valuable on a head for heavy grooving. It enables us to arrange the knives for cutting the maximum width and depth of groove. In addition to this, we are able to maintain the many features heretofore described which make for the saving of time in set-ups, grinding and manipulation.

Range obtained by Woods Plug Type Construction

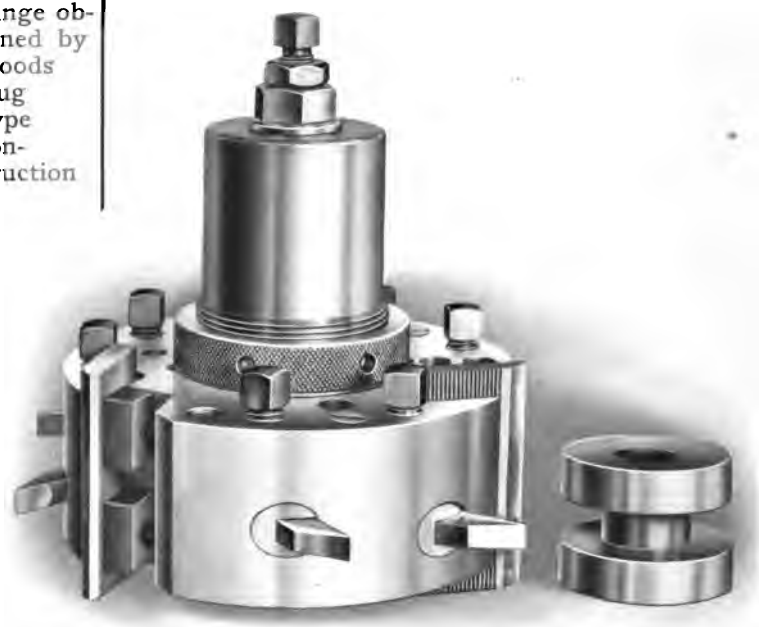

Woods Plug Type Disc Head and Setting Collar for Heavy Grooving.

Disc No. 2 W, 6⅝″ × 3″ — **Clamp Block No. 4597 E**
Groove Cutter No. 9158 F — **Setting Collar No. 9441 TT**
Jointing Cutters No. 4686 L

Woods Disc Heads for Double Matching

In this head we have placed two grooving cutters between each jointer, and by staggering these, the head will work the heaviest grooves.

Efficient dressing of double matched stock at fast feeds has been an item perplexing to every

side head manufacturer. These heads solve the problem and as far as we know they are the only ones on the market today that will give absolute satisfaction on this class of dressing at rapid feeds. The cutters can be jointed, insuring the highest quality of finish. They stand up to the fastest feeds. No broken cutters or delayed set-ups occur with these heads. By utilizing our plug type disc they have the same range and features as all our others. The kerf or re-saw groove must be worked with the tongue head.

Woods Fast-Feed Disc Heads for Double Matching.

Tongue Head.	Groove Head.
Sleeve No. 9445	Sleeve No. 9445
Inner bushing No. 4555	Inner bushing No. 4555
Clamp Nut No. 4556 A	Clamp Nut No. 4556 A
Disc No. 4 O, 6⅝″ x 1¾″	Disc No. 12 T, 6⅝″ x 2¼″
Tongue Cutter No. 48 H	Jointer Cutters No. 4686 H
Kerf Cutter No. 9158 A	Groove Cutters No. 9158 A
Kerf Cutter Holders No. 9157 A	Groove Cutter Holders No. 9158 A

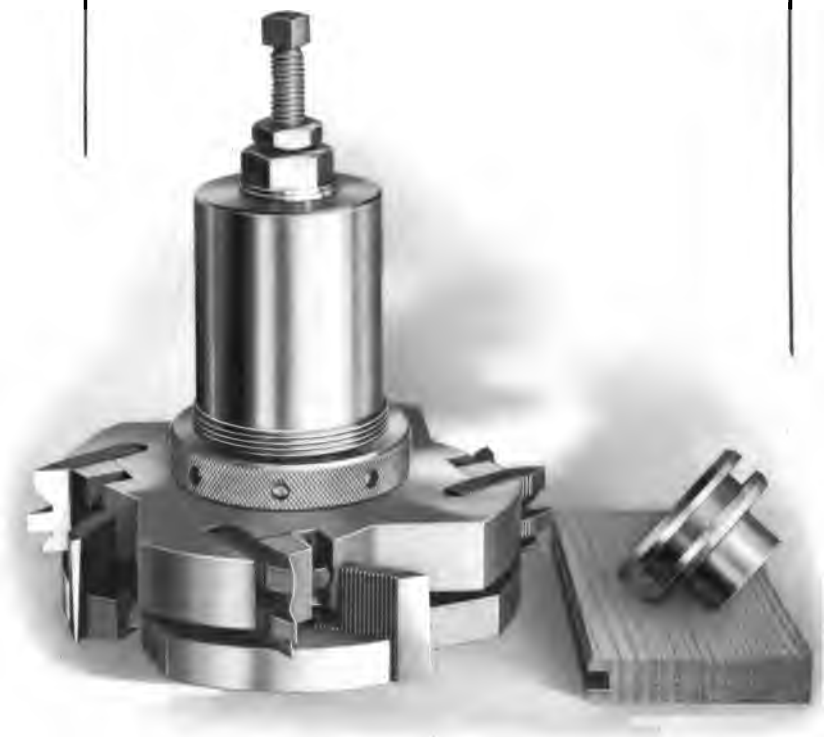

Woods Two Disc Head for Chamfering and Matching.

Top Disc No. 4 A, 6⅝"x1"
Bottom Disc No. 1 C, 6⅝"x⅝"

Jointer Cutters No. 4966
Groove Cutters No. 1 R

In some instances mills like to work a chamfer with the side head in conjunction with the tongue and groove. Our detachable type construction has made it possible to furnish as many as three different combinations for this class of dressing. The two member heads (A and C discs) shown here we make only to enable some of our users to utilize discs they already have in operation.

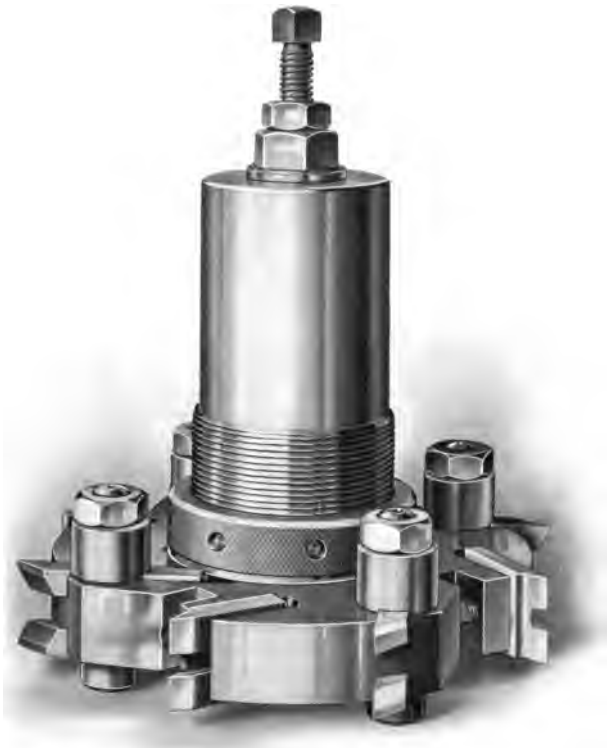

Woods Tool-Post Disc Head Set Up for Chamfering and Matching.

Disc No. 1 H
Tongue Cutter No. 7 H
Tool Post No. 5250
Upper Chamfer Cutter No. 5252 A
Lower Chamfer Cutter No. 5252 B

This is another type of disc head for working beveled matched stock. In a measure it represents our early efforts in developing a head for manufacturing this class of material at fast feeds. The tool-post head is not recommended for over a 100 feet per minute production.

Woods Plug-Type Disc Heads for Chamfering and Matching.

Profile Disc No. 4 O, 6⅝" x 1¾"
Tongue Cutter No. 69 H
Chamfer Cutters No. 9158 P

Profile Disc No. 11 T, 6⅝" x 1¾"
Jointer Cutters No. 4686 H
Chamfer Cutters No. 9158 V
Groove Cutters No. 9158 B

Working Beveled edged Stock with fast feed Side Heads

Much beveled edge matched material is worked in mills where the stock varies in width and the runs are short. The "WOODS" plug type head shown above is a very economical one in cases of this sort, and has met with wonderful success. On most fast feed machines now the chamfers are worked with the profiler. When run with the side heads we recommend the above heads.

The quickness with which the cutters can be trued, as well as the saving of time in removing and replacing the grooving knives, partly explains why this head is better for this work than either of the two previous ones.

Tongue Head

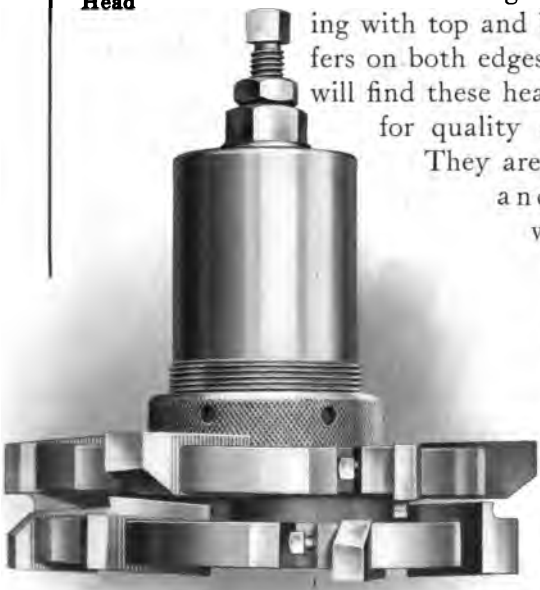

Mills dressing Boston Sheathing with top and bottom chamfers on both edges at fast feeds will find these heads unequalled for quality and capacity. They are self centering and equipped with high speed steel cutters. Their design and construction is distinctive. A separating collar or ring is furnished with the tongue head for grinding purposes.

Woods Disc Heads for matching and double chamfering

Groove Head

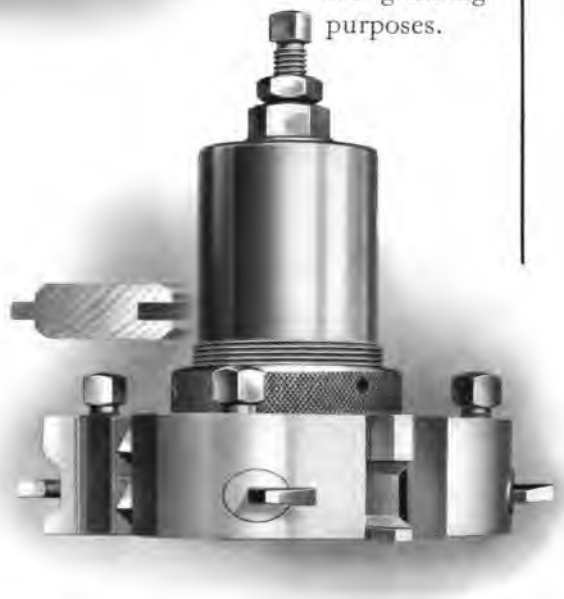

Special "WOODS" Disc Head for working a Cash Register Pattern

Universal use of Woods Disc

One of the first to take advantage of the "WOODS" Disc side head was a concern of national reputation. These illustrations show a special head made for the National Cash Register Co. of Dayton, Ohio, for handling one of their many unique patterns. The construction of the top member which is shown better in the dissected view is worthy of note. The pockets are milled out for the projecting knives in the lower disc, also the driving pins for the saw. The cutters in the lower member are lapped on the back so that the disc over the saw can be clamped tightly. (Other illustration at top of page 37).

Cash Register Head dissected.

Top Disc No. 9215, 6⅝" x ⅝"
Bottom Disc 5 G, 6⅝" x ⅝"
Cutter No. 9216
Saw No. 9214
Beveled Ring No. 4557
Knurled Nut No. 4556

Inner Bushing No. 4555 B
Sleeve No. 9445
Disc No. 9 C, 6⅝" x ⅝"
Centering Ring No. 4722
Beveled Ring No. 4557
Knurled Nut No. 4556
Jointer Cutters No. 4686 B

Disc No. 4 D, 6⅝" x 1 7/16"
Groove Cutters No. 4721
Bolts No. 4721 A
Nut No. 4723
Wrench No. 35

Dismembered two-disc groove head preparatory for jointing. When equipped with compensating screw this head is very advantageous for grooving hardwood flooring.

Woods Disc Tongue Head with divided Cutters

This head was designed for the special requirements of one or two users of "THE PLANERS OF WOODS." A divided cutter appealed to them because of the peculiarities of their stock. Here again is shown the range of our disc heads. While this head consists of two discs with four cutters each, we can make it with two six-knife members.

Woods 2 Disc Tongue Head with 8 sectional knives. Discs No. 2 N, 6⅝″×¾″, Cutter No. 31 H.

Woods Disc Head unlimited for Range

On a few of the subsequent pages are illustrations of "WOODS" Combinations for dressing patterns that would not be commonly termed regular side-head work, yet the simplicity with which they are handled and the ready adaptation of our heads to them, substantiates our claim of the unlimited range and capacity of the "WOODS" Self-centering Disc Head. The engravings alluded to will be found on pages 36 to 42. These are only a few of many special combinations we have made up.

Woods Multiple Member Disc Head Tipped to Show Base of Sleeve and Self-Centering Bushing.

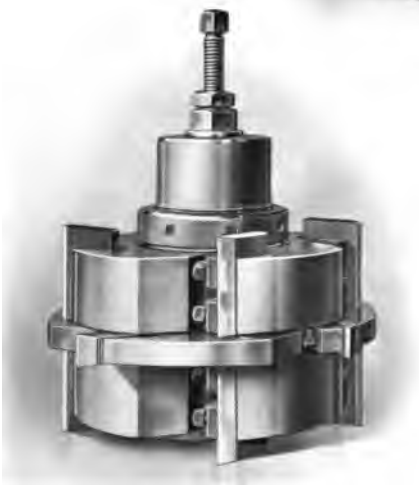

Woods Multiple Member Disc Heads for Splining Plank, Showing 3 Discs on each Head

Disc No. 8 C, 6⅝" x 1¼"
Disc No. 3 C, 7⅜" x ½"
Disc No. 8 C, 6⅝" x 1¼"

Our two and three disc combination heads are most substantial from every point of view. Simplicity is another of their characteristics. The pair equipped with three discs on each head is for heavy work, grooved or splined on both edges. The two and three disc set is for dressing heavy tongued and grooved material. These illustrations show the varied uses to which our discs can be applied.

WOODS SIDE HEADS

Woods Multiple Member Disc Heads for Heavy Matching

Tongue Head.
Upper and Lower Discs No. 1 C, 6⅝" x ¾"
Center Disc No. 2 L, 5⅝" x ⅝"

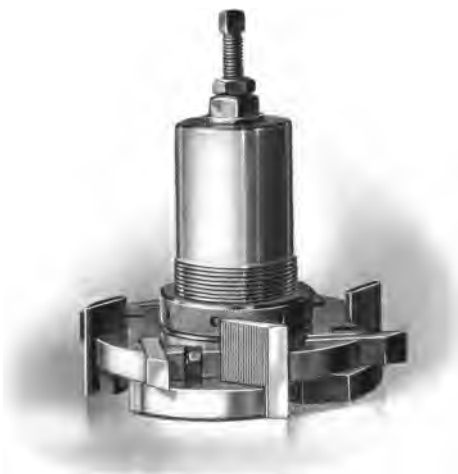

Groove Head.
Upper Disc No. 4 A, 6⅝ x ¾"
Lower Disc No. 1 C, 6⅝" x ¾"

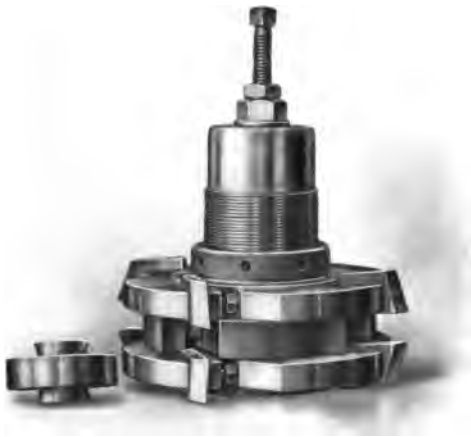

Upper and Lower Discs No. 3 C
6⅝″ x ⅝″
Center Disc No. 1L
5⅝″ x ⅞″
Setting Collar No. 9118 A

Disc No. 8C
6⅜″ x 1¼″
Setting Collar No. 9118 B
Cutter No. 8 AH

Woods 4-Knife Disc Heads for Sash Rail.

Many irregular patterns of lumber can be dressed on a four-sided machine if suitable equipment could be furnished for handling them. Lumber mills have found the "WOODS" disc construction of unusual advantage in this direction. We have selected two or three miscellaneous patterns to show the adaptability of our convertible and detachable construction to work of this sort.

WOODS SIDE HEADS

These heads are for working sash rail, a sample of which is in the picture. Notice how effectively the undercutting is handled. Also the adaptation of our head equipped with the 8 C disc for dressing the round edge. While these particular heads are special, they are of simple construction and give the best possible finish at fast rates of feed. All the knives can be trued with our profiler side head truing device.

Woods Disc Head for Jointing and Splitting — Group No. 9106
The Head Set Up and Taken Apart.

Head No. 9106
Top Disc. No. 9481
Holding Collar No. 9482
Knurled Nut No. 9479
Taper Ring No. 9480

This head was designed for jointing and splitting bevel siding on a moulder. Its construction is simple but is another illustration of the adaptability of our disc heads to special work. In this case the sleeve of the head and lower member are integral, being made in one forging.

No. 2 M Profile

No. 1 M Profile

Woods 4-Knife Solid Back Round Heads for Square Edging 2″ Stock

Many mills dress a large amount of square edge stock at fast feeds. They dress so much of this material it is economy for them to have heads for jointing only. For this work they prefer our solid back round type. The accompanying illustrations show two sizes of the heads. They are clamped on the spindles by self-centering bushings and the knives trued while running on the machine. Being equipped with our milled back cutters it is impossible for the knives to drive back under the heaviest cuts. We make them 2, 3, 4, 5 and 6″ high with either four or six high-speed steel knives each.

No. 2 K Head

No. 1 K Head

Woods 6-Knife Round Solid Back Heads for Square Edging 6″ Stock

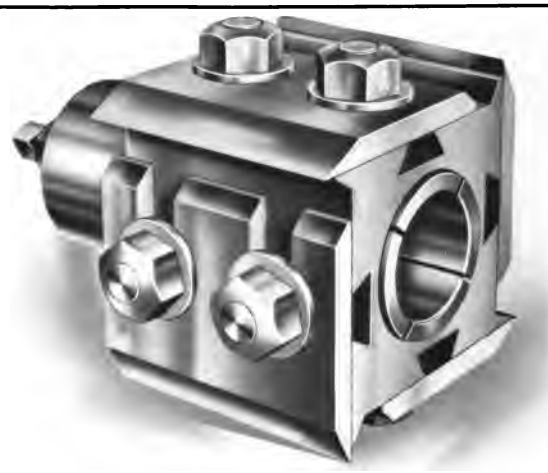

Woods 4″ Self-Centering Square Jointing Head No. 9401 A for Moulders or Small Sweep Planers. Inner Bushing No. 4555 A. Knives No. 11. Bolt No. 02⅝13. Nut No. 23

Self-centering Feature in Small Sweep Square Head

The four-sided slotted head is still used commercially to quite an extent. It has been advisable in our opinion to improve it in some respects to fit modern conditions. Its greatest detriment has been the method employed in holding it in position: *i.e.*, set screw. It was quite a simple matter for us to adapt our self-centering clamp bushing to the planer and matcher heads of this type because of their large cutting circle; but on the smaller sweep head, this was not so easy. By changing the shape of the bolt slots, the self-centering device can be used on the small circle head. You will observe in the accompanying illustration the head is made with taper slots instead of T slots. The head of the clamp bolt is tapered to conform with the shape of the slot. In this way, it is not necessary to remove so much metal from the forging, and in addition it permits of a larger bore in the head which is necessary for the inner self-centering device.

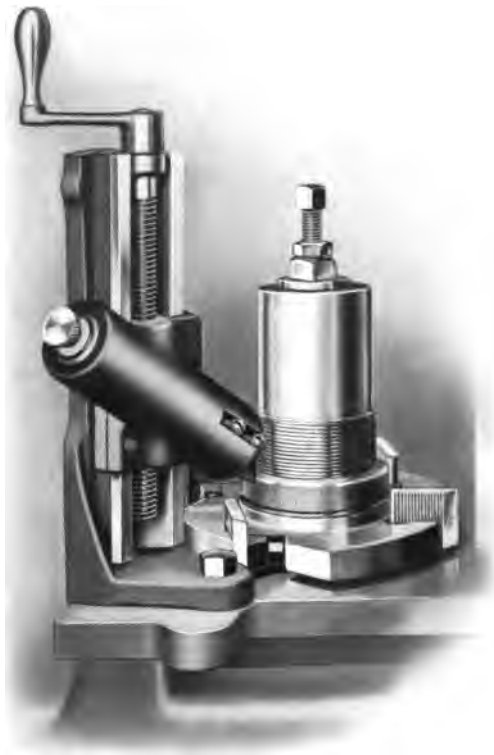

Woods Type "A" Side Head Truing Device for Straight Jointing and a 4-Knife Disc Head for Square Edging Thin Stock. Disc No. 1 C, 6⅝"×¾". Cutters, No. 4686 B. Jointing Stone No. 3901.

The Truing Process

One of the necessary functions in running fast feed side heads is the truing process. It is essential that some means be provided for jointing the cutters, otherwise an inferior quality of dressing will result. It is impossible to set the knives of any head and expect them to run in as true a circle as they appear when stationary. While the cutters are to all intent and purposes relatively true to each other when the head is still, the very slight variation hardly perceptible multiplies to such an extent when the head is running, that unless corrected the quality of finish is not the best. This untrueness must be removed while the head

is revolving. "WOODS" was the first to realize this, and one of the points around which our heads have been developed is that of jointing the cutters. On one of the preceding pages will be found an illustration of our type (A) side head truing device as used in connection with the jointing of cutters on a shiplap head. The same device is shown here in conjunction with a jointing head. The carriage containing the truing stone is operated up and down on the slide through the medium of a screw, to the top of which is attached a drop-forge crank for manipulating purposes. The stone itself can be very finely adjusted to and from the work by the screw at the top of its holder, the knurled head of which will be seen projecting. Our type "A" jointer is for straight jointing exclusively.

The Tongue Cutter Jointing Attachment

Woods Type "A" Side Head Truing Device with Tongue Cutter Attachment.

This jointing process proved so valuable to our heads we have extended it in several directions, one of which is our tongue cutter attachment. This is a smaller appliance mounted on the truing device for jointing the groove in the tongue cutter. With this equipment, the tongue cutter in its entirety can be trued and the highest quality of finish obtained. This little attachment is beneficial to the matching.

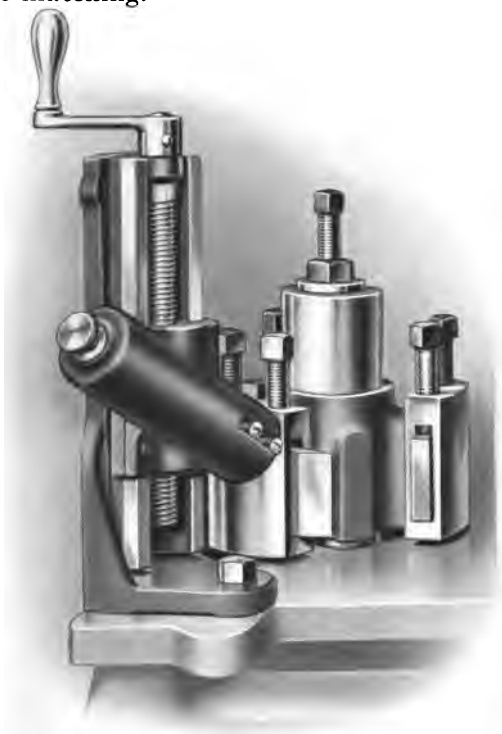

Woods Side Head Jointer Type "A"

Woods Type "A" Side Head Jointer and 3-Winged Jointing Head

The universal use to which the "WOODS" side head jointer is applicable, is well illustrated herewith. It is shown in position for truing knives in a three-winged steel head set up for square edge work.

WOODS SIDE HEADS

How to attach a Woods Side Head Jointer

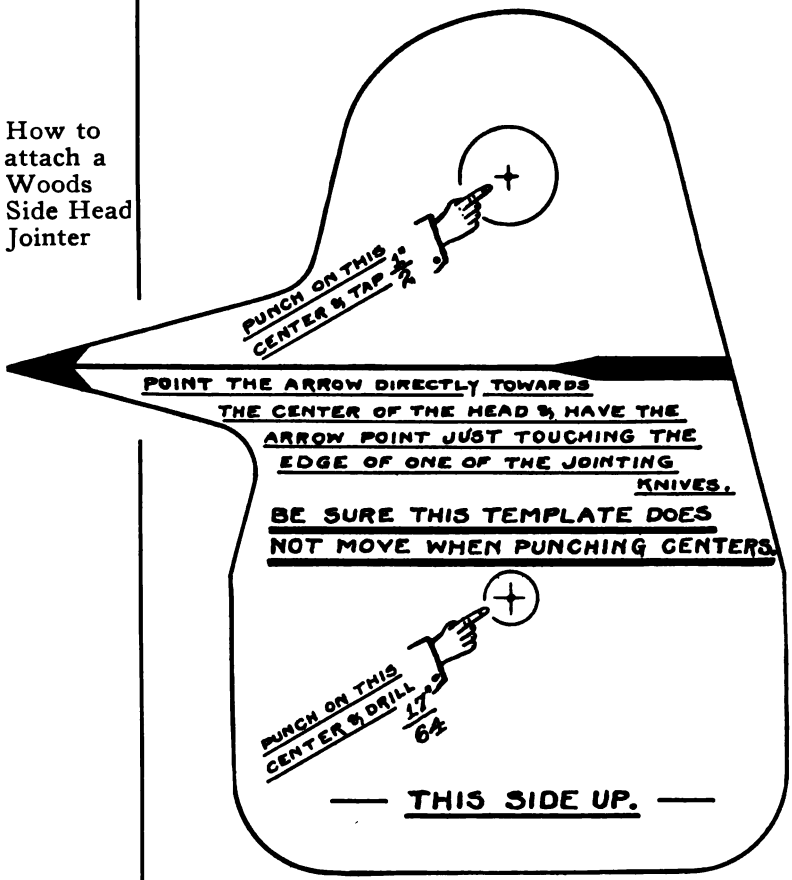

Direction Chart for Applying Woods Side Head Truing Device to a Planing Machine.

The Woods method of truing is so simple and effective some concerns using other makes of planers have placed Woods jointers on their machines. Customers operating planers built before the day of the truing device have installed Woods Disc Side Heads, and have also applied Woods Side-Head Jointer.

Those wishing to do the same may use above diagram to aid them in preparing their planer for the Woods Side-Head Truing Device.

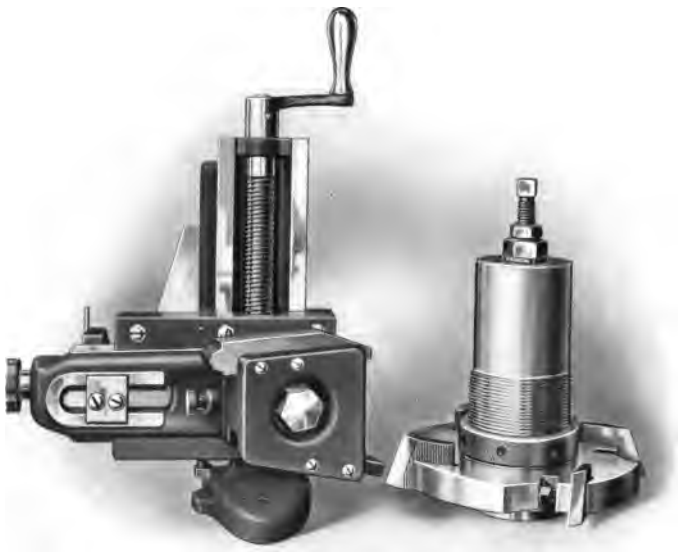

Woods Type "B" Side Head Truing Device for Novelty Jointing

The field of jointing is a broad one, for the working of various patterns with "WOODS" side heads is unlimited. The efficiency of the head, however, depends again upon the truing of the cutters. Our type B attachment is adapted to the jointing of formed knives. This is known as our novelty side head truing device; the principle of this is similar to the type A attachment. It holds two truing stones instead of one mounted on a swiveling turret. In jointing the carriage travels over a template corresponding in form to that of the cutters in the head. By this method it is impossible for the knife to lose its original shape, to say nothing of the accuracy of the truing. Another decided advantage in "WOODS" truing is that the correct jointing line left on the cutter facilitates re-sharpening the knives. This jointing line is a guide to the party doing the grinding, and enables him to reproduce the shape of the cutter accurately and quickly.

Woods Profiler Discs

Woods 6-Knife Profiler Disc with Clamp Collar and Beading Knives
These Cutters are ground for Cypress.
Disc No. 1 U, 6 5/8" x 5/8". Cutters No. 5323 C
Clamp Collar No. 5816 B
Clamp Block No. 4597 B. Clamp Block Screw No. 1/2, 5/16 C 1

The advantages of "WOODS" specialties are their simplicity, convertibility and range. Adding to these interchangeability, which is a feature distinctively "WOODS," has convinced millmen all over the country they are the greatest units of efficiency utilized to-day in the dressing of lumber. In designing them we deviated from old ideas by adopting construction demanded by new conditions. Devices for capacity, quality and labor saving were absolutely necessary on a modern planer. On these accessories depended the success of the machine. What we have achieved in developing side heads to meet these conditions has been discussed in the preceding pages. Your attention is now directed to our profiling discs. We have united these with our side heads by making them interchangeable one with the other, which feature the lumber world has found a great saving of money in mill practice.

Back view Woods No. 1 U 6⅝" x ⅝" Disc with Six Beading Cutters No. 5323 C, Showing Clamp Collar No. 5816 B Clamp Block No. 4597 B Clamp Block Screw No. ½, 5/16 O1 Clamp Collar Screw No. O 2½ 12

4- and 6-Knife Profiler Discs

The No. 1 U, 6-Knife Disc will dress beads 300 feet per minute or faster. All discs for beading are made with smooth bit seats. The advantage is that it makes possible the setting of knives in a set of two or more heads where the cutters have not worn evenly on account of one head being used more than the other. This only comes about in combinations for working beads, V's, chamfers and cuts of a like character. All other discs are milled for knives with corrugated backs.

The "WOODS" method of clamping discs on the profiler spindles is pleasing to every lumberman. Our clamp collar shown above is used only on heads that hold smooth back knives. The discs can be located anywhere on the spindle. The distance between two or more discs mounted on the profiler can be increased or diminished with practically no loss of time; the change being made so quickly.

Woods No. 4 G 6⅝" x ⅝" 4-Knife Disc with Clamp Collar No. 4909 B, for Smooth Back Bits.
Clamp Block No. 4597 B
Clamp Block Screw No. ½, 5/16 O1
Clamp Collar Screw No. O 2½ 12

Woods Profiler Combinations for Boston Sheathing

Our beading discs are made of such a thickness they can be set close enough to work V's and beads (one center and two edges) on 3¼" face stock. However, some mills manufacture sheathing with two center cuts in this width stock. For this pattern we mount the three or four discs on one sleeve clamped self-centrally on the spindle. The distance between the discs is taken care of by spacing collars. One of these sleeves mounted with four heads can be worked in several combinations by simply changing the spacing collars, *i. e.*, on sheathing with one center V, two center V's or no center V's on either or both sides of the board.

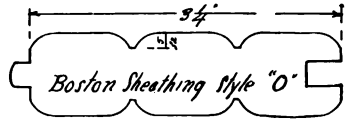

Woods Profiler Sheathing Combination

Woods Profiler Disc Combination for Working Pattern "O" Boston Sheathing.

Discs No. 4G 6⅝"x⅝". Cutter Nos. from left to right, 5346 C, 5346 B, 5346 A

Sleeve No. 5607
Inner Bushing No. 5608
Clamp Nut No. 4556
Hexagon Nut No. 6609

Woods No. 4K Profiler Discs with Clamp Sleeves set up for working No. 115 Y. P. M. A. Standard Siding. Pattern of Stock is shown in the Foreground with the Jointing Former. The latter is in 2 Sections. Right Hand Disc No. 8C 6⅜"x2½". Clamp Sleeve No. 9292 E. Inner Bushing No. 9293 E. Cutters No. 16Y. Clamp Nut No. 9134. Former No. 5300 U.

Left-Hand Disc 23C 6⅜"x2"
Clamp Sleeve No. 9292 C
Inner Bushing No. 9293 C

Cutters No. 15Y
Clamp Nut No. 9134

Woods Profiler Combination for No. 115 Siding

The lower engraving on page 53 shows two four-knife profiler discs, each equipped with self-centering clamp sleeve and a full set of cutters for working No. 115 Y. P. M. A. Standard siding. The success of our profiling combinations is that we can adapt the proper thickness of discs to the cut to be made. The disc making the longest cut is the thickest. On double siding patterns our jointing formers are made in two pieces to facilitate the truing operation.

It will be observed that each disc is mounted on its own sleeve. This arrangement is adopted for several reasons. It permits the overlapping of the cutters for good sharp corner dressing which is essential on this pattern. It also facilitates the setting up and truing operations.

Woods Profiler Disc with Clamp Sleeve for inside cut of Y.P.M.A. Standard Pattern No. 115 Siding.

Profile Disc No. 23 C $6\frac{3}{8}$″ x 2″. Clamp Sleeve No. 9292 C. Clamp Nut No. 9134. Inner Bushing No. 9293 C. Cutters No. 15 Y.

Woods Profiler Self-centering Clamp Sleeve

Outer Sleeve No. 9292 B. Inner Bushing No. 9293 B. Knurled Nut No. 9134. Spanner Wrench No. 41. Socket Wrench No. 33.

Our self-centering clamp sleeve is a very efficient member and an interesting one to study. It really consists of three integral parts, the split tempered steel center bushing, outside sleeve and knurled nut. The inner bushing is split two ways, so that in being drawn through the outer sleeve by the knurled nut, it clamps the spindle perfectly. This sleeve is used entirely on our profiler discs for heavy cuts requiring discs 1″ and over in thickness.

Woods Drip Cap Combination

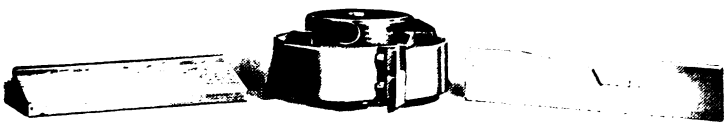

Woods Profiler Head for Drip Cap, Pattern No. 8286. Cutters No. 17 Y. Disc No. 8 C, 6⅜″ x 2½″. Former No. 5300 I A. Clamp Sleeve No. 9292 D. Inner Bushing No. 9293 D. Clamp Nut No. 9134.

The working of drip caps on fast feed matchers is rapidly becoming commercial practice. The combination shown herewith handles Y. P. M. A. Standard drip cap pattern No. 8286. A sample of the stock is shown in the engraving. The unit at the right of the head is the jointing form.

Woods 4-Knife Profiler Discs for Y.P.M.A Pattern No. 8151. Set up for Working on Top Spindle

Discs . . . . No. 1C, 6⅜" x ¾"
Sleeves . . . No. 9133 C.
Clamp Nuts . No. 9134
Cutters . . . Nos. { Disc on left No. 13 AH / Disc on right No. 14 AH
Former . . . No. 5300 BC.

The adaptability of the "WOODS" disc for cutting battens is well known. The members herewith dress Y. P. M. A. Batten No. 8151. The hollow back cut on this pattern is worked with another disc.

Woods 4-Knife Profiler Discs for Y.P.M.A Pattern No. 8428. Set up for Top Spindle to Work Mould to Guide

Disc No. 1 C, 6⅜" x 1". Cutters No. 14 AF. Disc 1 C, 7⅜" x 1". Cutter No. 13 AF. Clamp Nut No. 9134. Clamp Sleeve No. 9292 A. Inner Bushing No. 9293 A. Former No. 5300 AB.

This unit is for making base Y. P. M. A. pattern No. 8428. It is a "WOODS" two disc combination, disc being clamped on a separate sleeve. This head is made to work on the top spindle, mould to guide. The jointing form which is shown at the right of the head is in two sections. A pattern of the stock lies at the left.

The Clamp Sleeve at the Right of the Head is our Early Type and only Furnished on Special Orders.
Profile Disc No. 8 C, 6⅜" × 1½". Cutter No. 31 Y.

Woods Profiler Combination for Working Y. P. M. A. Pattern No. 8426.

This Cut shows clearly how Woods Discs are marked for Identification.
Discs No. 8 C, 6⅝"x2". Cutter No. 4686 T. Clamp Sleeves No. 9292 C. Inner Bushings No. 9293 C.

Woods Profiler Combination for making Hollow Back Cut 3" and over

Many base and casing patterns contain a wide hollow back cut. These are handled with two discs set up and mounted on individual clamp sleeves. The knife straddles both discs.

Woods Profiler Expansion Head for working Pulley Stiles

Woods Pulley Stile Combination

This illustration will interest every lumberman. It shows an expansion head for working a square groove in pulley stiles. It is a very difficult matter to make a cut of this kind without fuzzing up the grain of the wood inside the groove. This does not occur on this "WOODS" head. On this type of cut the size of groove must be maintained accurately. This is provided for in the construction of this head. As far as we know this is the only successful profiler head of its kind on the market today. The head is a two-disc combination, both of which are mounted on one self-centering clamp sleeve.

Woods Pulley Stile Head Dissected.
Outer Sleeve No. 9292 B. Inner Bushing No. 9293 B. Adjusting Spacing Ring No. 9425. Adjusting Nut No. 9426. Socket Wrench No. 33. Clamp Nut No. 9134. Cutter Nos. 12 A and 13 A.

Woods 6-Knife Round Solid Back Profiler Head for No. 117 Siding

Head No. 1X. Cutter No. 5356O

Patterns like No. 117 Y. P. M. A. and Pacific Coast Standards we recommend working with our round solid back head. This is made to hold either four or six cutters as the rate of production demands. The head is held self-centrally on the spindle. This self-centering arrangement consists of a tapered washer forced over the spindle by a nut. The head has one of each of these on each end.

Woods Four-sided Slotted Self-centering Profiler Head

The four-sided slotted head is being utilized to quite an extent on profiler work. It is of advantage where a variety of patterns are worked in short runs. In this head we have adopted our dovetail bolt construction. It is also equipped with self-centering clamp nuts. The clamping of the head on the spindle is accomplished by a taper bushing and nut in each end of the head as previously described.

Woods 6″ Self-centering Square Profiler Head for Jobbing Work. Head No. 3 R. Taper Washer No. 9385. Nut No. 9384 A 6″ Knife No. 93

Swaged Ripping Saw for Profiler with Clamp Collar. Saw 9½″ dia. x ⅛″ thick. Nut No. 9134. Drive Collar No. 9133 J

Profiler Rip Saw Combination

The use of saws on the profiler has been found very practical, and by this application the field for this attachment has been greatly enlarged. A number of users of the "WOODS" 400 type matchers are ripping stock on their planers anywhere from 150 feet and upwards per minute.

We can furnish any number of splitting saws for this work. Each saw is equipped with an individual clamp collar so that a series of them can be mounted on the spindle and set for ripping various widths.

Woods Clamp Sleeve for Rip Saws

Sleeve No. 9133 J. Clamp Nut No. 9134.

Our No. 9133 J clamp sleeve is used to hold rip saws on the profiler.

Woods Multiple Splitting Profiler Gang.
Sleeve No. 9422 B. Clamp Nut No. 9406. Filling-in Collars No. 4992 AA

Profiler Gang for Splitting

The range of the "WOODS" profiler for sawing purposes is shown in these views. This is an equipment consisting of 12 splitting saws mounted on one long self-centering sleeve The saws are separated by spacing collars. This set-up is being used by one of our customers in the Northwest for ripping $\frac{13}{16}$" stock into 13 strips one-half inch wide. It is being done with great success, and at fast rates of feed.

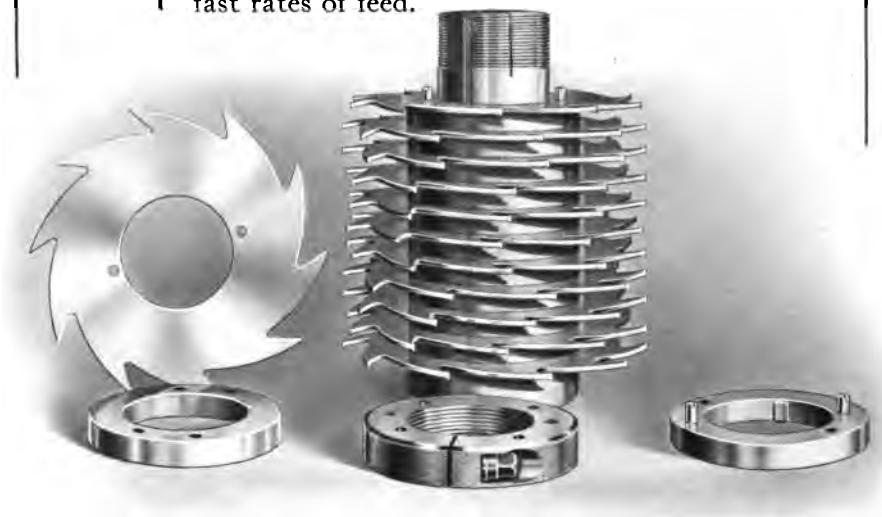

Woods Multiple Splitting Gang dissected.

Woods Twelve-Saw Clamp Sleeve with filling-in Collars

Sleeve Series No. 9422. Collar Series No. 4992. (A letter is added to the number to cover thickness of collar.)

Outer Sleeve No. 9422. Clamp Nut No. 9406. Spanner No. 41.

Our clamp sleeves for holding saws are made in different lengths. This one is used for two or three saws. It is 3½″ long between end clamps.

Sleeves Series No. 9422. (A letter is added to the number indicating the length of the sleeve.)

This illustration shows both the long and short clamp sleeves intact without the spacing collars. They convey an excellent idea of the range of combinations we can furnish for this class of work. The lengths of these sleeves vary from 3½″ to 9½″ in length.

Woods Clamp Sleeves for Ripping Saw Combinations

One of the principal points in the operation of fast feed heads for either profiling attachments or edge work is the setting of the cutters. Our type B setting stand will accommodate heads of all sweeps. Cutters of any type can be set accurately with this device.

The arm holding the setting collar is adjustable. The spindle on which the head itself is mounted operates on a turret and revolves either way. Proper provision for the up and down adjustment of the setting collar has been provided for. The illustration shows mounted on the stand a "WOODS" patent convertible disc groove head — on the right is the tongue head.

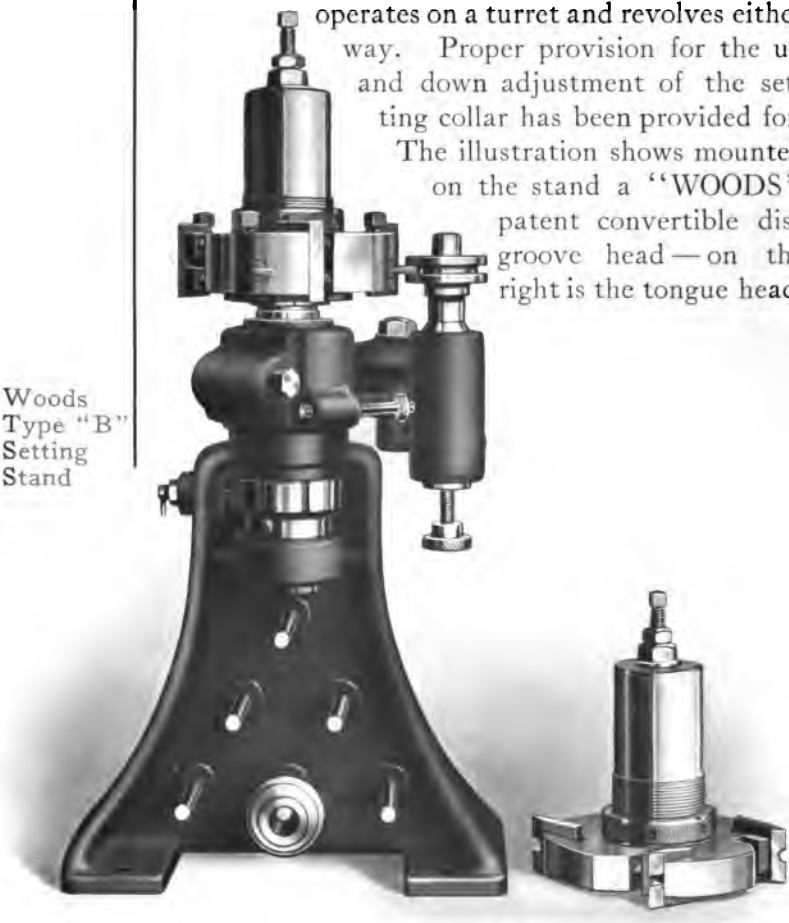

Woods Type "B" Setting Stand

Woods No. 229 Jointing Stand

Woods No. 229 Setting Up and Jointing Stand.

The profiling attachment is fast becoming a useful accessory for the working of mouldings. When used on our 400 type matchers, it is adapted to the working of a large number of variety cuts. Practically all the patterns are dressed with a two or three disc combination head. To reduce setting up time when changing machines from one pattern to another, we have just developed our tool-room moulding stand. The disc can be

set up and the cutters jointed the same as on the profiling attachment. In this way, while the machine is dressing one pattern of stock, the grinding room can be setting up the heads for the next pattern to be worked.

When the run is completed, it is only necessary to remove the heads on the profiler and transfer those on the moulding stand to the profiling attachment; all of which is accomplished in the minimum time. This stand when complete as shown in the illustration includes pedestals, countershaft and novelty truing device. We can furnish the stand only without pedestal truing device or countershaft.

Woods Side Head Grinder

This grinder is a necessary accessory to a modern mill equipment. With it the best results are obtained with fast-feed heads. It is a time-saver.

Woods No. 227 Side Head Grinder.

Woods No. 227 Side Head Grinder with Bar for thin Knives.

SECTION TWO

Profiles of Woods
DISCS

And Tables showing Set-ups for the Various Standard Patterns

Compiled for the purpose of familiarizing Users of Woods Heads and Discs with their adaptability and interchangeability; also to facilitate ordering.

PROFILE A.

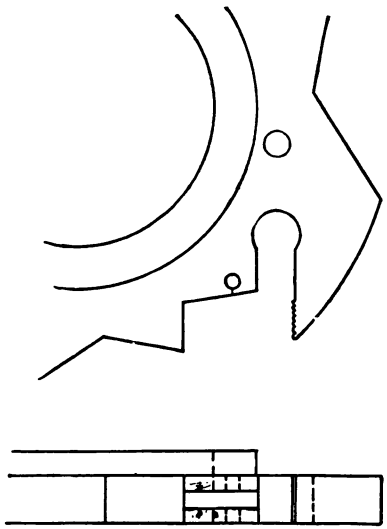

Discs of the "A" Profile are important units in the range of "WOODS" disc heads. This profile is used entirely for combination sets, *i. e.* in a two- or three-disc set-up or in cases where cutters in one disc will overlap its adjoining member.

These are all four-knife discs.

Profile	Adapted for	Diameter	Thickness	Bore	Order Number
1 A	Odd shapes of grooves on hardwood flooring fitted with micrometer adjusting screw	6⅝"	½", ⅝", ¾", and 1"	2 1/16"	1 A, 6⅝"× thickness
2 A	Same as above excepting on patterns not requiring compensating screw adjustment	6⅝"	½", ⅝", ¾", and 1"	2 1/16"	2 A, 6⅝"× thickness
3 A	Heavy edge work used in 3 disc combination back head	6⅝"	½", ⅝", ¾", and 1"	2 1/16"	3 A, 6⅝"× thickness
4 A	Same as 2 A excepting with 3 point separating bearing	6⅝"	½", ⅝", ¾", 1", and 1¼"	2 1/16"	4 A, 6⅝"× thickness
5 A	Same as 3 A except hub on reversed side so that disc can be used on front head	6⅝"	⅝", ¾", and 1"	2 1/16"	5 A, 6⅝"× thickness
6 A	3 disc head recessed to allow disc to drop	6⅝"	⅝", ¾", and 1"	2 1/16"	6 A, 6⅝"× thickness

PROFILE C.

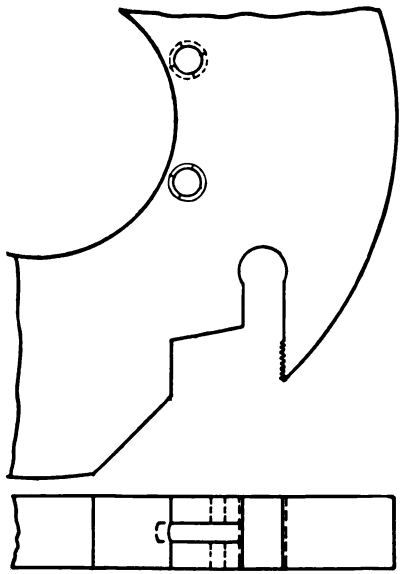

This series of discs has a greater range than any of the other profiles. They can be used on our side heads for matching, jointing, shiplap, beveled and irregular cuts as well as on the profiler for beading, grooved roofing, sidings, casings, etc. They are a striking example of the great range, interchangeability and convenience of "WOODS" heads. Practically any disc listed below can be used for two or more patterns of profiler or side head work.

These are all four-knife discs.

Profile	Adapted for	Diameter	Thickness	Bore	Order Number
1 C	Tongue head matching up to 1" and center cuts on Standard siding patterns. Large diameters for special edge and profiler work	6 3/8", 6 5/8", 7 3/8", and 8 1/8"	1/2", 5/8", 3/4", and 1"	2 1/16"	1 C Diameter × thickness
2 C	Profiler cuts used with filling in rings instead of individual clamp collars. Also used for hollow backing	5", 5 5/8", and 6 5/8"	1/2", 5/8", 3/4", and 1"	1 1/2"	2 C Diameter × thickness
3 C	Standard shiplap (hub on each side making it interchangeable for use on either head)	6 3/8", 7 3/8", 6 7/8", 7 5/8", 7 1/8", 7 7/8", and 8 1/8	3/4"	2 1/16"	3 C Diameter × 3/4"

PROFILE C — *continued.*

Profile	Adapted for	Diameter	Thickness	Bore	Order Number
4 C	The lower member of 2 disc grooving head for matching stock up to 2", recessed so as to drop head and to work in shallow matcher plates	6⅝"	¾" and 1"	2 1/16"	4 C, 6⅝" × thickness
5 C	Miscellaneous purpose	6⅜", 6⅝", 7⅜"	½", ⅝", ¾", and 1"	2 1/16"	5 C Diameter × thickness
6 C	Same as 2 C except for heavier cuts	5⅝" and 6⅝"	1¼" up to 2½" inclusive by ¼"	1½"	6 C Diameter × thickness
7 C	Same as 1 C except for old style clamp collar	6⅜", 6⅝", and 7⅜"	⅝," ¾", and 1"	2 1/16"	7 C Diameter × thickness
8 C	Same as 1 C only for heavier work	6⅜" and 6⅝"	1¼" up to 3" inclusive by ¼"	2 1/16"	8 C Diameter × thickness
9 C	The lower member of 2 disc grooving head for matched stock up to 1"	6⅝"	⅝"	2 1/16"	9 C, 6⅝" × ⅝"
10 C	Profiler work on early beading attachment	6⅜" and 6⅝"	½", ⅝", ¾", and 1"	1½"	10 C Diameter × thickness
11 C	Same as preceding one only for heavier work	6⅜" and 6⅝"	1¼" up to 2¼" inclusive by ¼"	1½"	11 C Diameter × thickness
12 C	2 disc grooving head up to 2" matching (made special for American No. 229 matcher)	6⅝"	¾" and 1"	2 1/16"	12 C Diameter × thickness
13 C	2 disc grooving head for hardwood flooring in combination with "A" disc (for special pattern flooring dressed on matchers of other makes)	6⅝"	¾" and 1"	2 1/16"	13 C Diameter × thickness
14 C	Heavy hollow backing, recessed for adaptation to "WOODS" hollow backing attachment	5"	1¼" up to 2½" inclusive by ¼"	1½"	14 C Diameter × thickness
15 C	Working 1" hardwood flooring on American Planer. Bottom disc on 2 disc combination front side head	6⅝"	¾"	2 1/16"	15 C, 6⅝" × ¾"

PROFILE C—*continued.*

Profile	Adapted for	Diameter	Thickness	Bore	Order Number
16 C	Working in conjunction with 15 C disc.	6⅝″	1¼″	2 1/16″	16 C, 6⅝″ ×1¼″
17 C	Under cut on heavy decking and double shiplap. Also member of 3 disc head on front spindle	6⅜″, 6⅝″, and 7⅜″	⅝″, ¾″, and 1″	2 1/16″	17 C Diameter × thickness
18 C	Top cut on preceding combination	6⅜″, 6⅝″, and 7⅜″	⅝″, ¾″, and 1″	2 1/16″	18 C Diameter × thickness
19 C	Top cut on 3 disc combination for groove head	6⅜″, 6⅝″, and 7⅜″	⅝″, ¾″, and 1″	2 1/16″	19 C Diameter × thickness
20 C	Center cut on preceding combination for groove head	6⅜″, 6⅝″, and 7⅜″	⅝″, ¾″, and 1″	2 1/16″	20 C Diameter × thickness
21 C	Center cut for tongue head or lower member of groove head of preceding combination	6⅜″, 6⅝″, and 7⅜″	⅝″, ¾″, and 1″	2 1/16″	21 C Diameter × thickness
22 C	Miscellaneous	6⅜″, 7⅜″	¾″	2 1/16″	22 C Diam. ×¾″
23 C	Inside cut 115 Y. P. M. A. standard	6⅜″	2″	2 1/16″	23 C, 6⅜″ ×2″
24 C	Jointing groove edge of inch flooring. Circular bit groove head	6⅝″	⅝″	2 1/16″	24 C, 6⅝″ ×⅝″
27 C	Special cove cut worked with profiler (made for National Cash Register Co.)	6⅝″	1½″	2 1/16″	27 C, 6⅝″ ×1½″
28 C	Jointing, recessed to use in connection with short threaded sleeves	6⅝″	2½″	2 1/16″	28 C, 6⅝″ ×2½″
29 C	Special profiler cove cut (made for National Cash Register Co.)	6⅝″	1½″	1 1/16″	29 C, 6⅝″ ×1½″
30 C	Special profiler cove cut used in connection with preceding disc	6⅝″	¾″	3¼″	30 C, 6⅝″ ×¾″

[1] 17, 18, 19, 20, and 21 C discs suited to numerous other combinations.

PROFILE C — *continued.*

Profile	Adapted for	Diameter	Thickness	Bore	Order Number
31 C	Stair nosing. Special disc formed on periphery for side head	7⅜″	1½″	2⅛″	31 C, 6⅝″×1½″
32 C	Heavy profiler work. Self-centering disc	6⅝″	3½″	2⅛″	32 C, 6⅝″×3½″
33 C	Hollow backing on new "WOODS" 501 hardwood flooring machine	5″	1″	1½″	33 C, 5″×1″

PROFILE D.

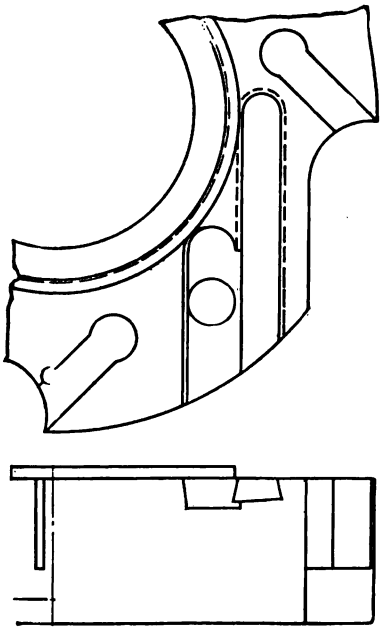

These discs were developed for use on our two-disc grooving heads. They are not now in demand as much as they were at one time, as our plug type discs 2 O, 1 W, and 2 W combine a two-member grooving head into one disc.

These D discs we continue to make for heads that are now out, and to take care of such demand as there will be for them on special patterns. The 1 D, 2 D, and 3 D discs of this profile were discontinued for the latter types 4 D, 5 D, and 6 D which are finished to give the cutters cutting clearance, to prevent friction or overheating.

Profile	Adapted for	Diameter	Thickness	Bore	Order Number
1 D	Grooving match stock up to 1″ thick. Grooving member of 2 disc head, superseded by 4 D disc	6⅝″	$1\frac{7}{32}$″	3½″	1 D, 6⅝″ × $1\frac{7}{16}$″
2 D	Same as above equipped with compensating screw for hardwood flooring, superseded by 5 D disc	6⅝″	$1\frac{7}{16}$″	3½″	2 D, 6⅝″ × $1\frac{7}{16}$″
3 D	For grooving 2″ flooring, superseded by 6 D disc	6⅝″	$1\frac{5}{16}$″	3½″	3 D, 6⅝″ × $1\frac{5}{16}$″

PROFILE D — *continued.*

Profile	Adapted for	Diameter	Thickness	Bore	Order Number
4 D	Grooving match stock up to 1″ thick. Grooving member of 2 disc groove head	6⅝″	$1\frac{7}{16}$″	3½″	4 D, 6⅝″× $1\frac{7}{16}$″
5 D	Grooving hardwood flooring up to 1″ thick equipped with compensating screw	6⅝″	$1\frac{7}{16}$″	3½″	5 D, 6⅝″× $1\frac{7}{16}$″
6 D	Grooving 2″ flooring	6⅝″	$1\frac{5}{16}$″	3½″	6 D, 6⅝″× $1\frac{5}{16}$″
7 D	Same as preceding disc, an addition of the compensating screw	6⅝″	$1\frac{5}{16}$″	3½″	7 D, 6⅝″× $1\frac{5}{16}$″
8 D	Heavy grooving on decking	6⅝″	$1\frac{7}{16}$″	3½″	8 D, 6⅝″× $1\frac{7}{16}$″
9 D	Same as 4 D excepting for small sweep machines	6″	$1\frac{7}{16}$″	3½″	9 D, 6″× $1\frac{7}{16}$″

PROFILE F.

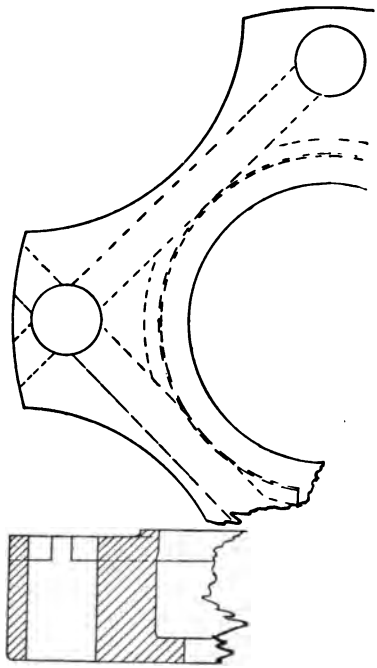

This profile represents in a measure our initial step in the manufacture of disc matcher heads. It is sometimes termed the tool post construction. While this disc is not regular, there is some demand for it on special work. It is reversible for use on either the tongue or groove spindle.

Profile	Adapted for	Diameter	Thickness	Bore	Order Number
1 F	Early type grooving member for two disc side head for matched stock up to 1" thick	6⅝"	1½"	2$\frac{27}{32}$"	1 F, 6⅝" × 1½"

PROFILE G.

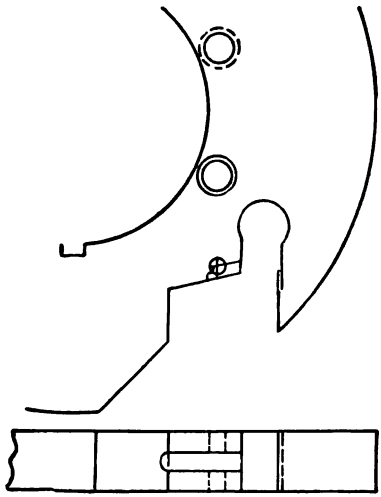

These discs were designed for use on the profiler, but equally adapted for side head work as will be observed in the reference below. 5 G is a disc used by the National Cash Register Co., to work one of their special patterns, and again illustrates the great range of our disc construction. Discs of this profile are all finished for smooth back cutters and made for holding four knives.

Profile	Adapted for	Diameter	Thickness	Bore	Order Number
1 G	Light profiler work, beading and groove roofing	6 3/8" and 6 5/8"	1/2", 5/8", 3/4", and 1"	2 1/16"	1 G Diameter × thickness
2 G	Same as 1 G, except superseded by the 4 G disc	6 3/8" and 6 5/8"	1/2", 5/8", 3/4", and 1"	1 1/2"	2 G Diameter × thickness
3 G	For beading and profiler work	6 3/8" and 6 5/8"	3/4" and 1"	1 1/2"	3 G Diameter × thickness
4 G	Beading and light profiler cuts. Standard Beader disc	6 3/8" and 6 5/8"	1/2", 5/8", 3/4", 1", and 1 1/4"	2 1/16"	4 G Diameter × thickness
5 G	Special National Cash Register Co., for sawcut on side head	6 5/8"	5/8"	2 1/16"	5 G, 6 5/8" × 5/8"
6 G	Special disc made for beading with "WOODS" hollow backing attachment	5"	1"	1 1/2"	6 G, 5" × 1"

PROFILE H.

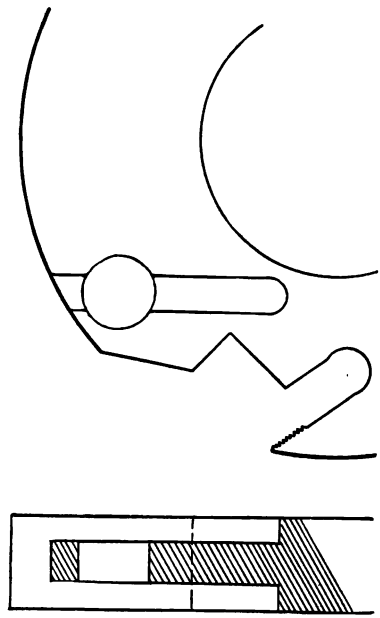

While not of general adaptation it is suited to many patterns of special work. There are so many mills working miscellaneous patterns of stock that the larger variety of discs we can furnish, the greater the uses for our heads.

This profile is made for eight knives (four groovers and four jointers).

Profile	Adapted for	Diameter	Thickness	Bore	Order Number
1 H	Early type grooving disc for side heads	6⅝"	1"	2 1/16"	6⅝"×1"

PROFILE J.

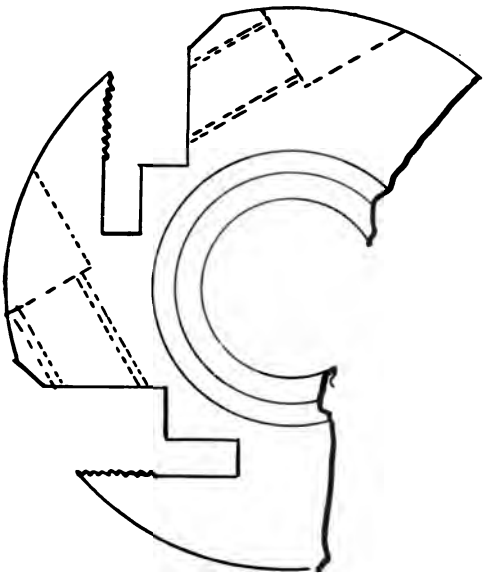

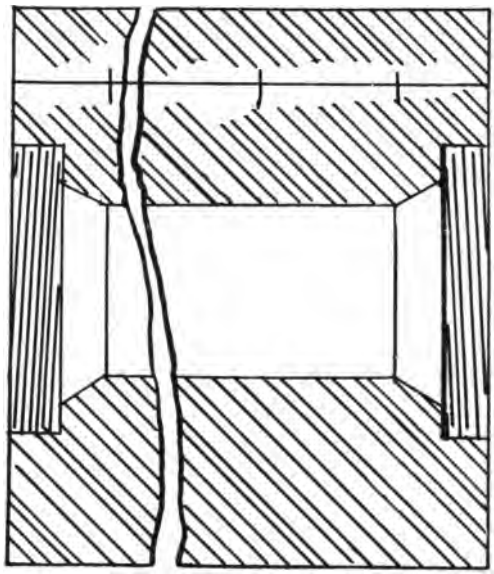

The heads of this profile are of four-knife design. This series of heads are adapted entirely to heavy bevel, single, double siding, and miscellaneous novelty profile patterns. With the exception of 1 J head, these are all finished for milled or toothed back cutters. The 1 J is very similar to the 1 E profile, excepting that it is keyed to the spindle for driving purposes, while the former was held in position by the pressure of the filling in rings brought to bear on it by a nut on end of spindle.

Profile	Adapted for	Diameter	Length	Bore	Order Number
1 J	Solid back round profile head for heavy work such as No. 117 and 118 Y. P. M. A. standard patterns for smooth back cutters; superseded by 3 J and 4 J profiles	5⅞″	6″	1½″	1 J, 5⅞″× 6″
2 J	Same as 1 J except with old style self-centering sleeve; milled for toothed back cutters	5⅞″	6 5/16″ and 10⅜″	2 3/16″	2 J, 5⅞″× length
3 J	Same as 2 J except with new style self-centering clamp nut	5⅞″	4″, 4½″, 5″, 6 5/16″, 8″, and 10⅜″	1 3/16″	3 J, 5⅞″× length

PROFILE J — *continued.*

Profile	Adapted for	Diameter	Length	Bore	Order Number
4 J	Same as 3 J	5⅞″	4″, 4½″, 5″, 6 5/16″, 8″, and 10⅜″	1½″	4 J, 5⅞″ × length
6 J	Same as 3 J but for profilers of other makes	6⅜″	4½″, 6 5/16″, 8″, and 10⅜″	2 5/16″	6 J, 6⅜ × length

PROFILE K.

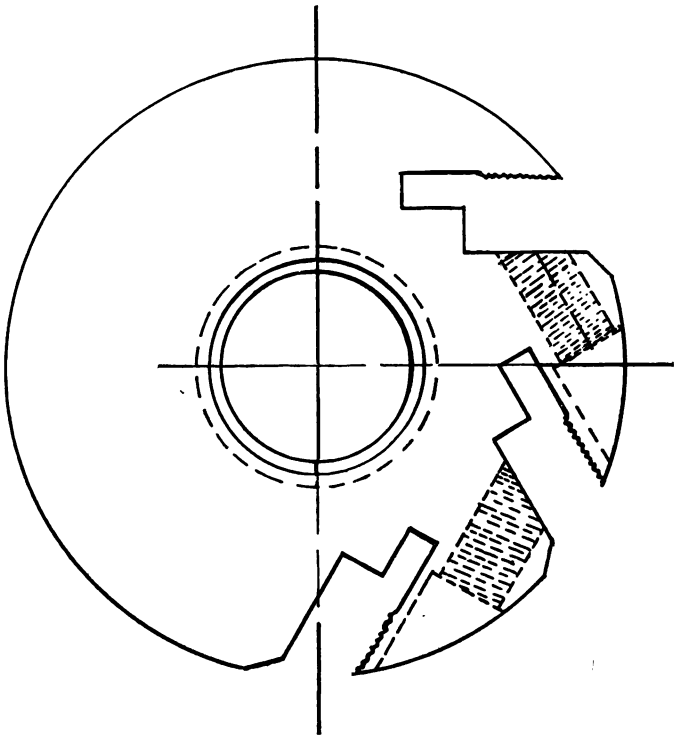

The increased demands of the lumber industry for a round side head for jointing to hold more knives have been responsible for our (K) profile. This series is the same as profile (M) with the exception that these heads hold six knives instead of four. The commercial term applied to these heads is high speed round jointer heads.

Profile	Adapted for	Diameter	Length	Order Number
1 K	Edge jointing on back spindle	6⅞″	3″, 4″, and 6″	2 K, 6⅞″ × length
2 K	Same as 2 K but for use on front side spindle	6⅞″	3″, 4″, and 6″	3 K, 6⅞″ × length

PROFILE L.

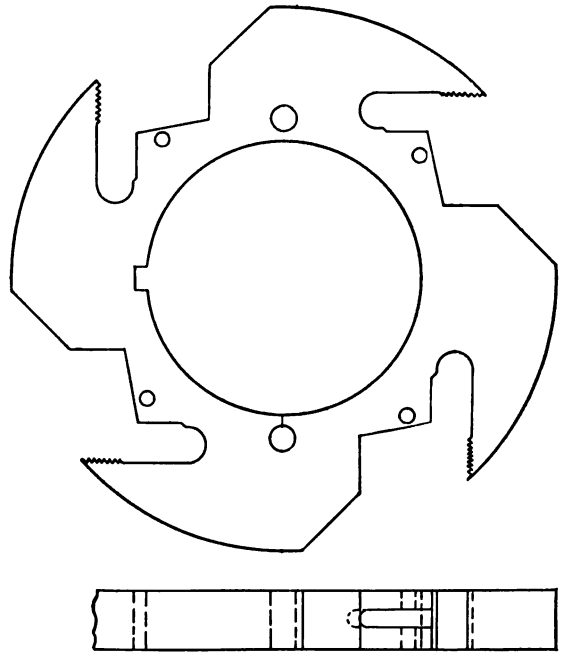

Perhaps an appropriate title for this profile would be our miscellaneous series. It was created by users of discs of our other profiles who wished to run additional patterns without going to the expense of purchasing new heads complete, *i. e.*, the discs they had could be utilized for other classes of work if they could purchase one or two members of a little different design that could be combined with them.

This is the function of the "L" profile, and it bears out our contention that "WOODS" heads are the most economical. "L" discs can be utilized for innumerable purposes; some of the most popular we have tabulated below.

These are all four-knife discs.

Profile	Adapted for	Diameter	Thickness	Bore	Order Number
1 L	Center member for three disc tongue head for heavy double shiplap	5⅝" and 6"	½", ⅝", ¾", and 1"	2 1⅛"	1 L Diameter × thickness
2 L	Same as 1 L with the addition of hub on each side for separating purposes	5⅝" and 6"	½", ⅝", ¾", and 1"	2 1⅛"	2 L Diameter × thickness

PROFILE M.

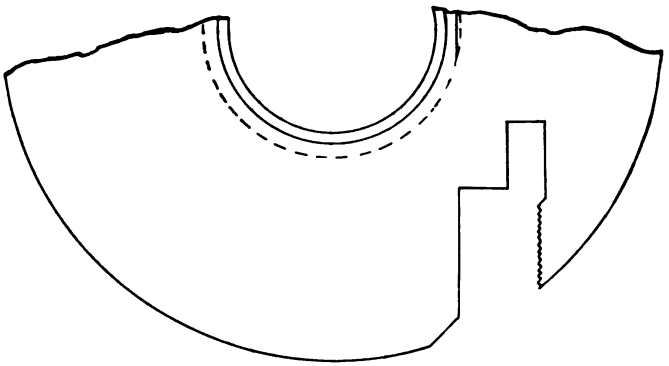

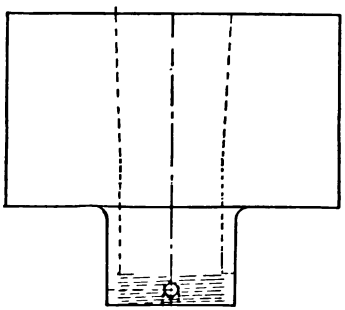

This profile covers our self-centering, solid back, round side heads made to receive high speed steel knives with toothed backs. These heads are designed to hold four knives. The series cover one pair of heads of 1 M, being for the guide side and the 2 M its mate for the opposite spindle. Heads of the same type for holding six knives will be found in profile K. These are termed round jointer heads.

Profile	Adapted for	Diameter	Length	Order Number
1 M	Edge jointing on back spindle	6⅞″	3″, 4″, and 6″	1 M, 6⅞″× length
2 M	The reverse of 1 M, namely for front side spindle	6⅞″	3″, 4″, and 6″	2 M, 6⅞″× length

PROFILE N.

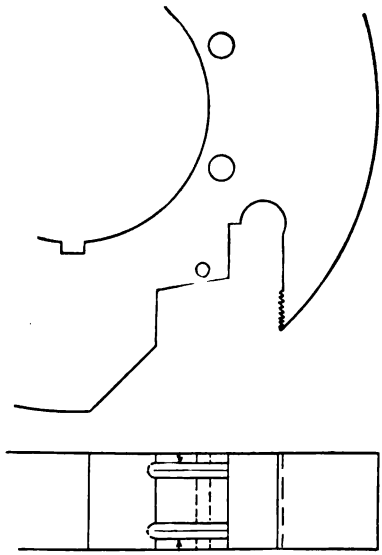

The distinctive feature of this profile is that it is adapted principally to the holding of milled cutters for deep novelty and miscellaneous cuts, also for dressing long tongues. Cutters of this description are naturally made of thick stock, therefore, the bit seats in the discs are made larger than ordinarily. It can readily be seen that these discs are adapted to a large variety of work.

These are all four-knife discs.

Profile	Adapted for	Diameter	Thickness	Bore	Order Number
1 N	Heavy side head and profile pattern work. Corrugated knives are used	6 3/8" and 6 5/8"	1 1/4" up to 3" inclusive by 1/4"	2 1/16"	1 N Diameter × thickness
2 N	Same as 1 N recessed for drop	6 3/8" and 6 5/8"	1 1/4"	2 1/16"	2 N Diameter × 1 1/4"
3 N	Same as 1 N only for lighter cuts	6 3/8" and 6 5/8"	5/8", 3/4", and 1"	2 1/16"	3 N Diameter × thickness

PROFILE O.

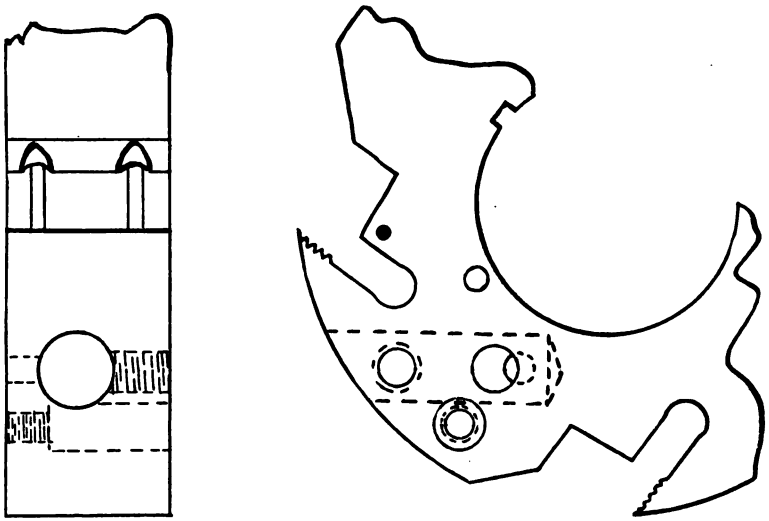

This profile was developed to take care of our plug type discs. The "O" profile discs hold eight cutters. Discs of this series are adapted to working of grooves with either front or back matcher spindles. This profile disc is the one that we use on the grooving head of our fast feed side heads. It is of distinctive type, and probably responsible more than any other for what is being accomplished with modern fast feed side heads.

Profile	Adapted for	Diameter	Thickness	Bore	Order Number
2 O	Grooving and jointing flooring up to 2″ thick. (Standard plug type disc)	6⅝″	1¾″	2 1/16″	2 O, 6⅝″ × 1¾″
3 O	Disc for working tongues in all thicknesses on double ceiling, also for working groove in matched stock up to 2″ thick with front spindle when dressing tongue to guide	6⅝″	1¾″	2 1/16″	3 O, 6⅝″ × 1¾″
4 O	Same as 3 O with plug cutters arranged for working kerf in heavy double flooring	6⅝″	1¾″	2 1/16″	4 O, 6⅝″ × 1¾″

PROFILE O — *continued.*

Profile	Adapted for	Diameter	Thickness	Bore	Order Number
5 O	Same as 4 O with plug cutters arranged for working still heavier patterns. Can also be used for working groove in heavy decking on front spindle	6⅝"	2½"	2 1/16"	5 O, 6⅝" × 2½"
6 O	Working groove in special patterns where groove is dressed near top surface of material. This disc cuts groove as high as 1¼" above board level	6⅝"	2½"	2 1/16"	6 O, 6⅝" × 2½"
7 O	Working groove, for front spindle on special patterns	6⅝"	2¼"	2 1/16"	7 O, 6⅝" × 2¼"
8 O	Heavy grooving plug type disc	6⅝"	2½"	2 1/16"	8 O, 6⅝" × 2½"
9 O	Same as 2 O. For small sweep planers, 6¾" jointing circle	6⅜"	1¾"	2 1/16"	9 O, 6⅜" × 1¾"

PROFILE R.

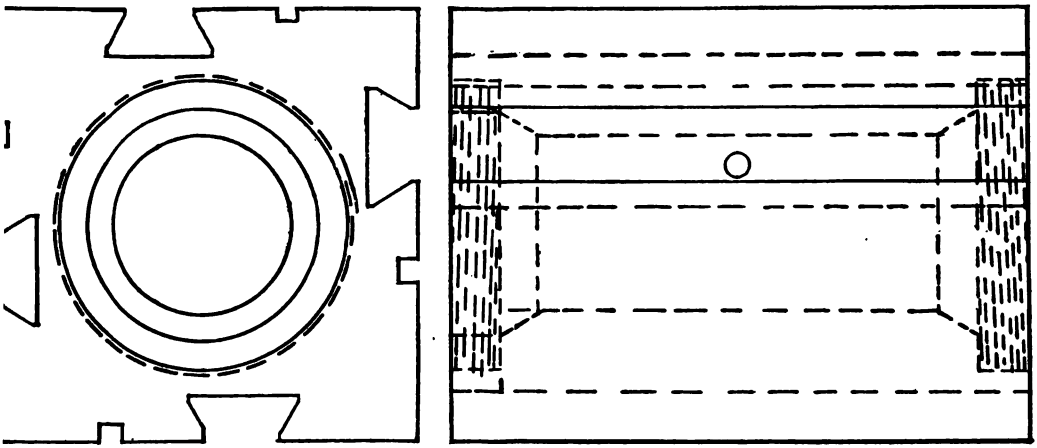

Heads of this profile are gaining in popularity every day. They are very useful for variety work especially where the runs are short. It is made practically for jobbing work.

Profile	Adapted for	Square	Length	Bore	Order Number
1 R	Four sided "T" slotted head for jobbing work on profiler with self-centering sleeve	4¼"	4" to 10" inclusive by inches	1 5/16"	1 R × length
2 R	Same as 1 R except slotted for bolts with dove tail head	4½"	4" to 10" inclusive by inches	2 1/16"	2 R × length
3 R	Same as 2 R except without lips, but with new steel self-centering clamp nut	4½"	4" to 10" inclusive by inches	1 1/16"	3 R × length
4 R	Same as 3 R	4½"	4" to 10" inclusive by inches	1½"	4 R × length

PROFILE S.

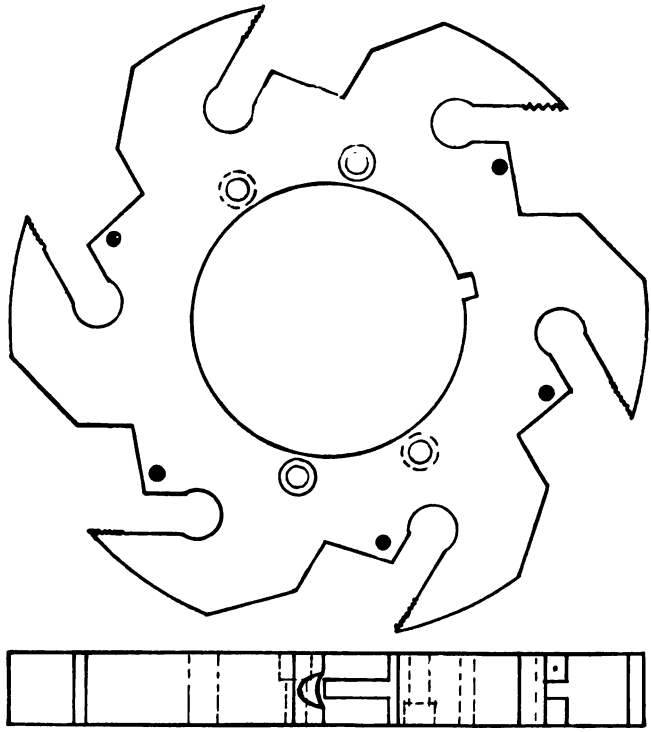

Since feeds of three hundred feet or more per minute have been used, it has been necessary to increase the number of cutters on our side and profiler heads. The outcome of this has been our "S" profile, all of which are made for six knives. It is impossible to enumerate the range of this particular series for like discs of the "C" profile, they are adapted to practically all commercial purposes and interchangeable between our profiler and side heads.

Profile	Adapted for	Diameter	Thickness	Bore	Order Number
1 S	Tongue head matching up to 1" and center cuts on standard siding patterns, large diameters for special work	6⅜" 6⅝" 7⅜"	½", ⅝," ¾", and 1"	2 1/16"	1 S, Diameter × thickness
2 S	Same as 1 S only for heavier work	6⅜" 6⅝"	1¼" to 3" inclusive by ¼"	2 1/16"	2 S, Diameter × thickness
3 S	For standard shiplap, hub on each side making it interchangeable for use on either head	6⅜" 7⅜"	¾"	2 1/16"	3 S, Diameter × thickness
4 S	Special pattern for side head work	10⅝"	¾"	3⅜"	4 S, 10⅝" × ¾"

PROFILE T.

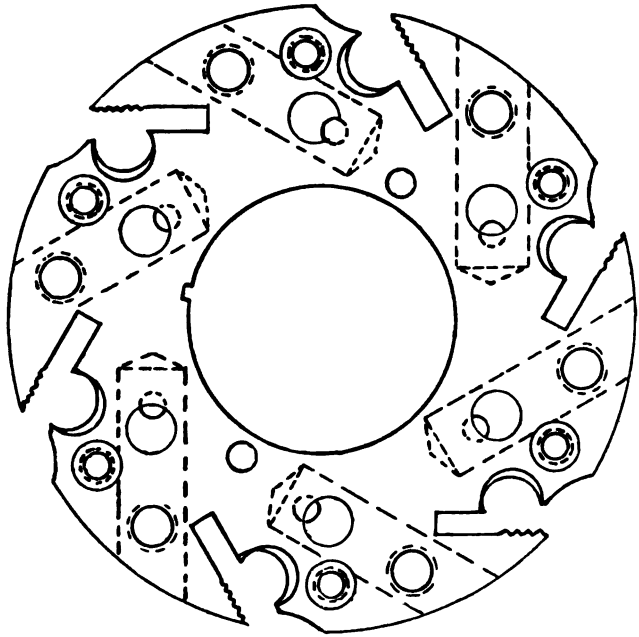

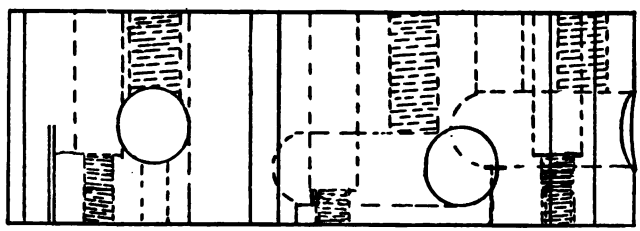

This "T" profile has been created by a demand for a head to dress double matched material at fast feeds. These discs are used in connection with heads for double matching, and heavy grooving stock up to 2″ thick. Their development opened up a field of usefulness which at this time appears to be unlimited. We are assured of one thing, however, and that is — for the work mentioned above, these discs cannot be excelled, neither can they be equalled in set-up or low cost of maintenance. They all hold twelve cutters.

PROFILE T — *continued.*

Profile	Adapted for	Diameter	Thickness	Bore	Order Number
2 T	Plug type side head groove disc for matched stock up to 2″	6⅝″	1¾″	2 1/16″	2 T, 6⅝″ × 1¾″
6 T	Grooving in heavy material, similar to 2 T, *i. e.*, to carry 12 bits	6⅝″	2½″	2 1/16″	6 T, 6⅝″ × 2½″
11 T	Plug type disc for thin double ceiling	6⅝″	2¼″	2 1/16″	11 T, 6⅝″ × 2¼″
12 T	Same as 11 T with grooving cutters spaced farther apart for dressing thicker double ceiling	6⅝″	2½″	2 1/16″	12 T, 6⅝″ × 2½″
13 T	Same as 12 T except grooving cutters spaced farther apart for double flooring	6⅝″	2½″	2 1/16″	13 T, 6⅝″ × 2½″
14 T	Same as 12 T except space between grooving cutters is increased to allow for special saw kerf or special pattern of double ceiling	6⅝″	2¼″	2 1/16″	14 T, 6⅝″ × 2¼″

The 2 "T" is our standard plug type groove disc with twelve cutters for working flooring up to 2″ thick.

PROFILE U.

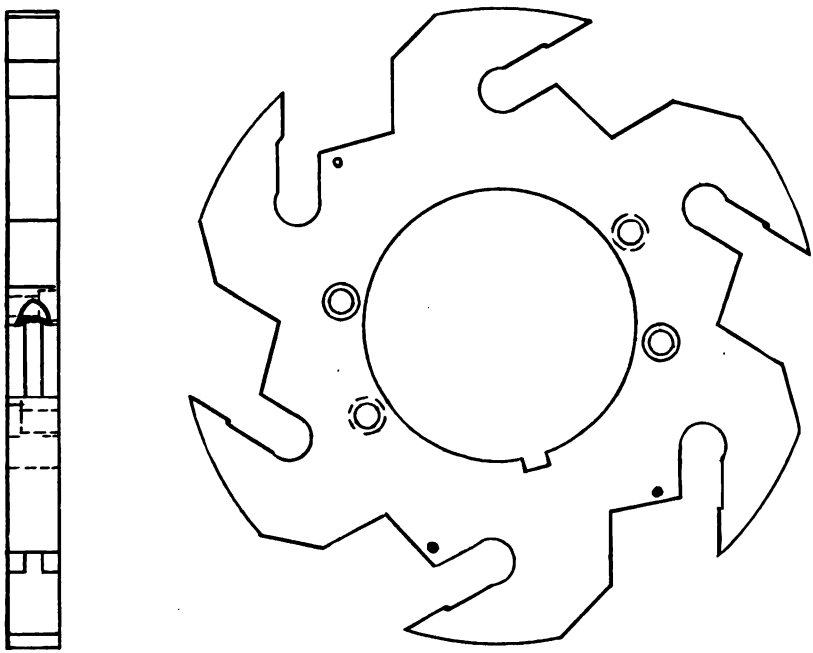

This is a creation of a two to three hundred foot feed era and covers disc for beading principally, though they are interchangeable on our profiler and side heads. Discs of this profile are suited to light profiler cuts of any character and should not be used on heavy work on account of the bit seats being milled for smooth back cutters. For dressing heavy profile and side head patterns at the feeds alluded to above we recommend our "S" profile disc.

Profile	Adapted for	Diameter	Thickness	Bore	Order Number
1 U	Beading on light profiler cuts	6⅝"	⅝", ¾", and 1"	2 1/16"	1 U, 6⅝"× thickness
2 U	Same as 1 U excepting for heavier work	6⅝"	¾", 1", and 1¼"	2 1/16"	2 U, 6⅝"× 1¼"

PROFILE V.

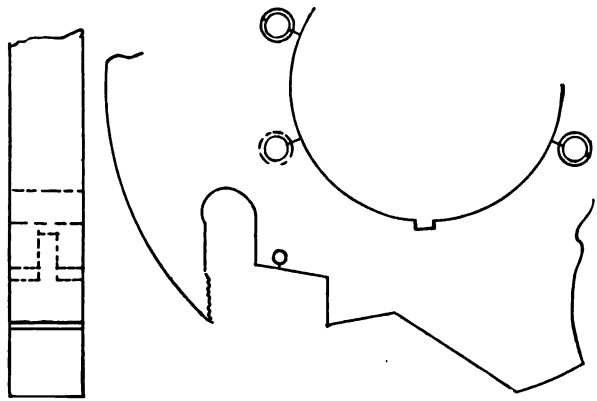

The reason for this profile is intimated in the tabulated form below, *i. e.*, to make possible a head that will dress stock with a long tongue in conjunction with a chamfer cut or a deep groove in combination with a chamfer cut. This disc is usually found on a head with either the 1 C or 4 C disc.

Profile	Adapted for	Diameter	Thickness	Bore	Order Number
1 V	Top member of 2 disc combination on either tongue or groove head where it is necessary to use thick moulded knives for combination cuts such as chamfer and grooving. This is used in connection with 1 C and 4 C discs mostly	6⅝″	¾″, 1″, 1¼″	2 1/16″	1 V, 6⅝″ × thickness

PROFILE W.

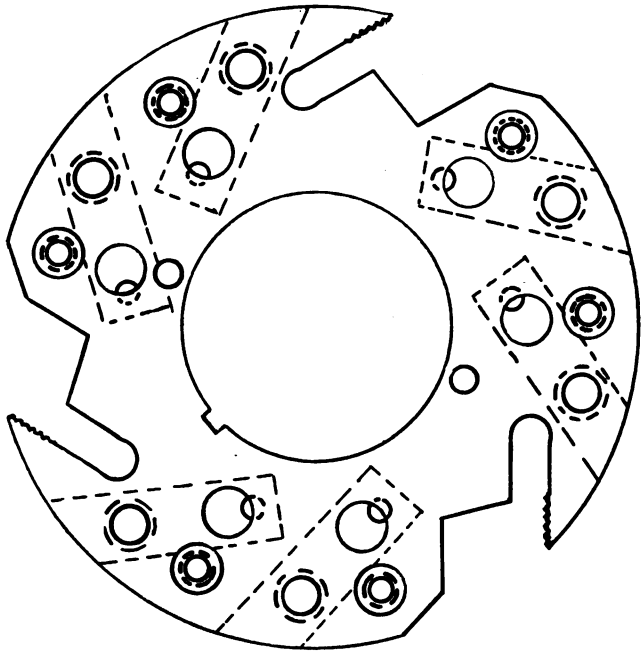

These heads are designed principally for working grooves on both edges of heavy stock, and like all of our other profiles some of them dress special patterns. This goes to show while we have developed a number of profiles for a special purpose, the range of the heads has made it necessary to add to them from time to time in order to keep a proper record of the different styles of discs.

All 9-knife discs.

Profile	Adapted for	Diameter	Thickness	Bore	Order Number
1 W	For working spline in heavy decking on front spindle	6⅝″	2½″ and 3″	2 1/16″	1 W, 6⅝″× thickness
2 W	Same as 1 W only for back spindle	6⅝″	2½″ and 3″	2 1/16″	2 W, 6⅝″× thickness
3 W	Special plug type disc for making double groove in an electric moulding pattern with profiler	6⅝″	2″	2 1/16″	3 W, 6⅝″× 2″

PROFILE W — *continued.*

Profile	Adapted for	Diameter	Thickness	Bore	Order Number
4 W	Disc for grooves on double ceiling and applicable to front spindle for stock dressed tongue to guide	6⅝″	2¼″	2 1/16″	4 W, 6⅝″× 2¼″
5 W	Same as 4 W with less space between the two rows of plug cutters for working thinner double matched material	6⅝″	2¼″	2 1/16″	5 W, 6⅝″× 2¼″
6 W	Same as 4 W except for back spindle	6⅝″	2¼″	2 1/16″	6 W, 6⅝″× 2¼″
7 W	Same as 5 W except for back spindle	6⅝″	2¼″	2 1/16″	7 W, 6⅝″× 2¼″
8 W	Same as 1 W with greater separation between grooving cutters to work wider groove	6⅝″	3″	2 1/16″	8 W, 6⅝″× 3″

PROFILE X.

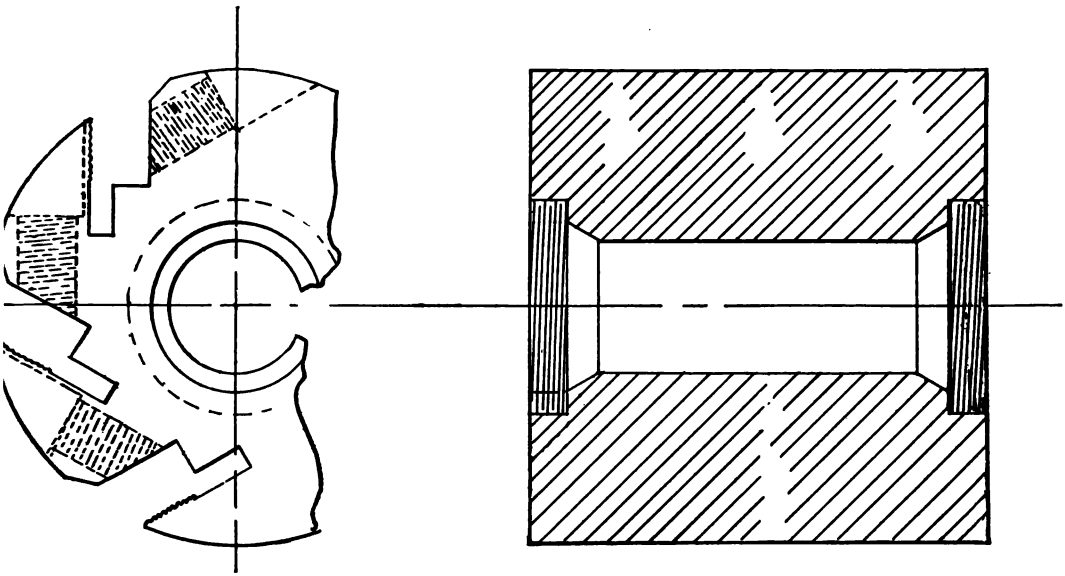

This profile covers our six-knife solid back self-centering round profiler heads for heavy patterns such as Y. P. M. A. Standard No. 117 and No. 118. It is another creation of the rapid feed era.

Profile	Adapted for	Diameter	Length	Bore	Order Number
1 X	Solid back round profile head for heavy work such as No. 117 and No. 118 Y. P. M. A. Standard patterns for toothed back cutters	6⅝″	4″, 4½″, 5″, 6⅝″, 8″, and 10⅜″	1 1/16″	1 X, 6⅝″ × length

NOTE.

On the tabulated ordering charts, term "front side" means operating side of machine, and "back side" means cut made on guide side of machine.

The profiler discs 1″ and over in thickness are equipped with self-centering clamp sleeve. The only exception to this being 1″ discs used for beading. These are equipped with clamp collar.

The profiler discs less than 1″ in thickness excepting as noted above are equipped with clamp collar.

Our clamp sleeve consists of three members, namely, outer sleeve, inner bushing, and clamp nut. The number of the sleeve is governed by the thickness of disc and size of spindle on which it is used. Number of clamp collar depends on diameter of profiler spindles. Tabulated form below is given to facilitate ordering.

When ordering cutters or discs for either profiler or side heads, please specify if jointing template is wanted.

When ordering clamp sleeeve, always quote number of sleeve, bushing, and nut.

PROFILER CLAMP COLLARS

For	Number	Size Spindle
½″ Disc ½″ Disc	4909 A 5816 A	1½″ 1 3/16″
⅝″ Disc ⅝″ Disc	4909 B 5816 B	1½″ 1 3/16″
¾″ Disc ¾″ Disc	4909 C 5816 C	1½″ 1 3/16″
1″ Disc 1″ Disc	4909 D 5816 D	1½″ 1 3/16″

SELF-CENTERING CLAMP SLEEVE

For	Center Sleeve	Inner Bushing	Nut	Size Spindle
1″ and 1¼″ discs 1″ and 1¼″ discs	9292 A 9292 A	9293 A 9293 AA	9134 9134	1 3/16″ 1½″
1½″ and 1¾″ discs 1½″ and 1¾″ discs	9292 B 9292 B	9293 B 9293 BB	9134 9134	1 3/16″ 1½″
2″ and 2¼″ discs 2″ and 2¼″ discs	9292 C 9292 C	9293 C 9293 CC	9134 9134	1 3/16″ 1½″
2½″ and 3″ discs 2½″ and 3″ discs	9292 D 9292 D	9293 D 9293 DD	9134 9134	1 3/16″ 1½″

DETAILS TO BE SPECIFIED WHEN ORDERING

SIDE HEADS. Number of cutters on each head. Pattern of stock to be worked (giving thickness, whether finished face up, down, or center-matched, tongue, groove).

ORDER BLANK

WORK SIDE. **GUIDE SIDE.**

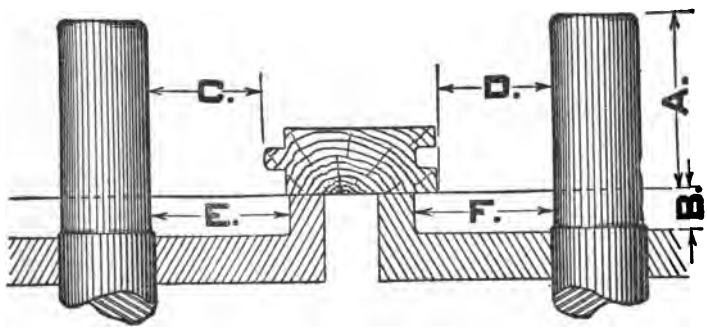

When machines are not Woods give figures as per sketch.

Give exact size or send wire for diameter of spindle_____

Give height of spindle above board level. Line A_____

Give depth of recess below board level. Line B_____

Give longest distance allowable. Line C_____ **Line D**_____

Give shortest distance allowable. Line C_____ **Line D**_____

Give free scope for head. Line E_____ **Line F**_____

These forms to be used when ordering heads for machines other than "The Planers of Woods"

CLAMP COLLARS AND SLEEVES. When new collars or sleeves are desired, state size of spindle, bore and thickness of disc to which they are to be applied.

CLAMP BLOCKS. Give thickness of disc and number of blocks wanted.

NOTE.

On the tabulated ordering charts, term "front side" means operating side of machine, and "back side" means cut made on guide side of machine.

The profiler discs 1″ and over in thickness are equipped with self-centering clamp sleeve. The only exception to this being 1″ discs used for beading. These are equipped with clamp collar.

The profiler discs less than 1″ in thickness excepting as noted above are equipped with clamp collar.

Our clamp sleeve consists of three members, namely, outer sleeve, inner bushing, and clamp nut. The number of the sleeve is governed by

[illegible] and 1¼ discs	9292 B	9293 BB	9134	1 1/16 1½″
2″ and 2¼″ discs 2″ and 2¼″ discs	9292 C 9292 C	9293 C 9293 CC	9134 9134	1 13/16″ 1½″
2½″ and 3″ discs 2½″ and 3″ discs	9292 D 9292 D	9293 D 9293 DD	9134 9134	1 13/16″ 1½″

DETAILS TO BE SPECIFIED WHEN ORDERING

SIDE HEADS. Number of cutters on each head. Pattern of stock to be worked (giving thickness), whether finished face up, down, or center-matched; tongue, groove or lap to guide; hard or soft wood. If stock is standard quote number of pattern (see back section in book); if special submit sample or dimensioned sketch.

Chamfered or rounded corners, it is always understood, are worked with Profiler heads unless specified otherwise.

Always state type and shop number of machine for which heads are to be used, if for a Woods Planer. For other makes of machines supply data indicated on attached forms.

DISCS FOR SIDE HEADS AND PROFILER. See tabulated charts in rear of book, and quote number of disc specified beside pattern you desire to work.

When discs are to work special patterns, give diameter, thickness, bore and number of knives and where used.

For duplicating discs quote full number stamped on periphery of old one.

Profiler discs are always furnished with clamp collars and sleeves unless otherwise specified.

Always state diameter of Profiler spindle when ordering discs for Profiler attachment.

CUTTERS FOR SIDE HEADS. Specify how many in a set, pattern to be worked, whether face up, down, center-matched, tongue or groove to guide, hard or soft wood. If pattern to be worked is not regular furnish size of tongue and groove.

When ordering broken sets state how many and whether for tongueing, grooving or jointing. Orders for a set of knives for groove head we interpret as meaning both grooving and jointing cutters.

It is necessary when ordering individual tongue cutters to state which way the cutter tilts when in the disc (up or down) and number of cutters.

Orders for a set of cutters for one shiplap head we interpret as meaning cutters for both discs.

In every case we recommend quoting order number of the disc in which the cutters are to be used.

When ordering blanks or finished cutters give dimensions in following order:

1st. Length of cutting edge.
2d. Width (which is from cutting edge to back edge).
3d. Thickness.
(*i. e.* $1\frac{5}{8}'' \times 2'' \times \frac{5}{16}''$)

CLAMP COLLARS AND SLEEVES. When new collars or sleeves are desired, state size of spindle, bore and thickness of disc to which they are to be applied.

CLAMP BLOCKS. Give thickness of disc and number of blocks wanted.

INDEX

Standards

Y. P. M. A. . . . . Tables 1 to 8
Boston Sheathing . . . . . " 8 to 9
N. C. P. M. A. . . . . " 9 to 12
P. C. L. M. A.
O. & W. L. M. A. . . . . " 13 to 18
S. W. and W. L. M. A.
West Coast L. M. A. . . . . " 19 to 26
British Columbia Lumber and Shingle Manufacturers, Ltd., Standard . . . . . " 26 to 30
Mountain Lumber Manufacturers

Abbreviations

S. L. M. A. Std. — Southern Lumber Manufacturers' Association Standard
Y. P. M. A. " — Yellow Pine Lumber Manufacturers' Assoc. Standard
N.C.P.M.A. " — North Carolina Pine Manufacturers' Assoc. Standard
N. Y. " — New York Pine Manufacturers' Association Standard
P. C. " — Pacific Coast Manufacturers' Association Standard
O. & W. M. A. " — Oregon & Washington Manufacturers' Assoc. Standard
S. W. M. A. " — Southwestern Washington Manufac'rs Assoc. Standard
B. C. L. & S. M., Ltd., Std., — British Columbia Lumber and Shingle Manufacturers, Limited, Standard
M. L. M. A. Std. — Mountain Lumber Manufacturers' Association Standard
W.C.L.M.A. " — West Coast Lumber Manufacturers' Assoc. Standard
S. M. A. Ltd. " — Shingle Manufacturers' Association, Limited, Standard
Std. — Standard.
Flg. — Flooring.
Clg. — Ceiling.
S. L. — Shiplap.

TABLE 13

P. C. L. M. A.
O. and W. L. M. A.
S.W. and W.L.M.A. } Standards

3/8" x 4" Beaded Ceiling
3/8" x 6" Beaded Ceiling
1/2" x 4" Beaded Ceiling
1/2" x 6" Beaded Ceiling
5/8" x 4" Beaded Ceiling
5/8" x 6" Beaded Ceiling
5/8" x 4" Double Beaded Ceiling
5/8" x 6" Double Beaded Ceiling

Eng 1739.14.5
Woods side heads and profiler heads
Cabot Science
006947516
3 2044 092 023 944